AMSTRAD

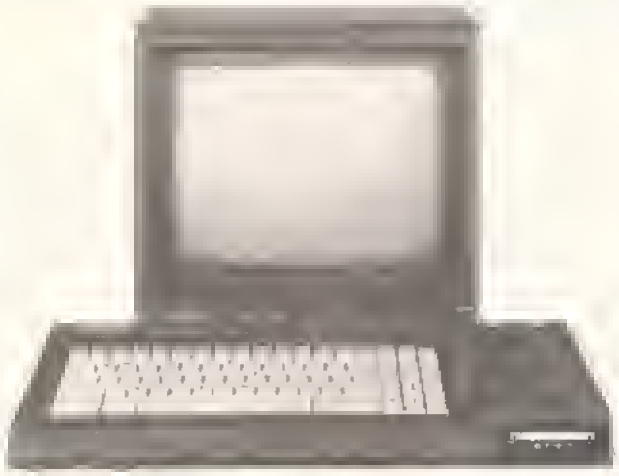

http://amstrad.cpc.free.fr

CPC6128
MICRO COMPUTER
CTM644
COLOUR MONITOR
GT65 GREEN MONITOR

SERVICE MANUAL

PRICE: £8.00

CONTENTS	Page
Safety Test	2
Keyboard Exploded View and Parts List	3
CPC6128 Basic Hardware Analysis	4
Function Diagrams	5
Function Diagrams	6
Sottware Errors	7
Diagnostic Flow Chart	8,9,10,11
Alignment Checks	12,13,14,15
CPC6128 Main PCB	16,17,18
CPC6128 CPU Circuit Diagram	19,20
Electrical Parts List	21
GT65 Exploded View and Cabinet Parts List	22
GT65 Circuit Diagram and Voltages	23
GT65 Main PCB and Alignment Instructions	24
GT65 Electrical Parts List	25
CTM644 Cabinet Drawing and Electrical Parts List	26
CTM644 Electrical Parts List and Alignment Instructions	27
CTM644 Electrical Parts List and Voltages	28
CTM644 Circuit Diagram	29,30
Main PCB	31,32
Interface Circuit Diagram	33,34
Disc Control Circuit Diagram	35,36
Cassette Control Circuit Diagram	36
Mechanism and Mechanical Replacements	37
Technical Specitication	Back page

SAFETY TEST

All Monitors are safety tested to the following specifications.

1). Flash Test
Test at 3kV between the live and neutral of the mains lead joined together and and ALL accessible metal points on the exterior of the set.

2). Insulation Resistance Test
Test between the live and neutral of the mains lead joined together and ALL accessible metal points on the exterior of the set to show a resistance of at least 4Mohm.

If after servicing there is any doubt about continued electrical safety the above tests should be carried out.

AMSTRAD CONSUMER ELECTRONICS PLC
BRENTWOOD HOUSE, 169 KINGS ROAD, BRENTWOOD, ESSEX CM14 4EF.
Telephone: Brentwood (0277) 228888. Telex: 995417 AMSELE G.

KEYBOARD EXPLODED VIEW

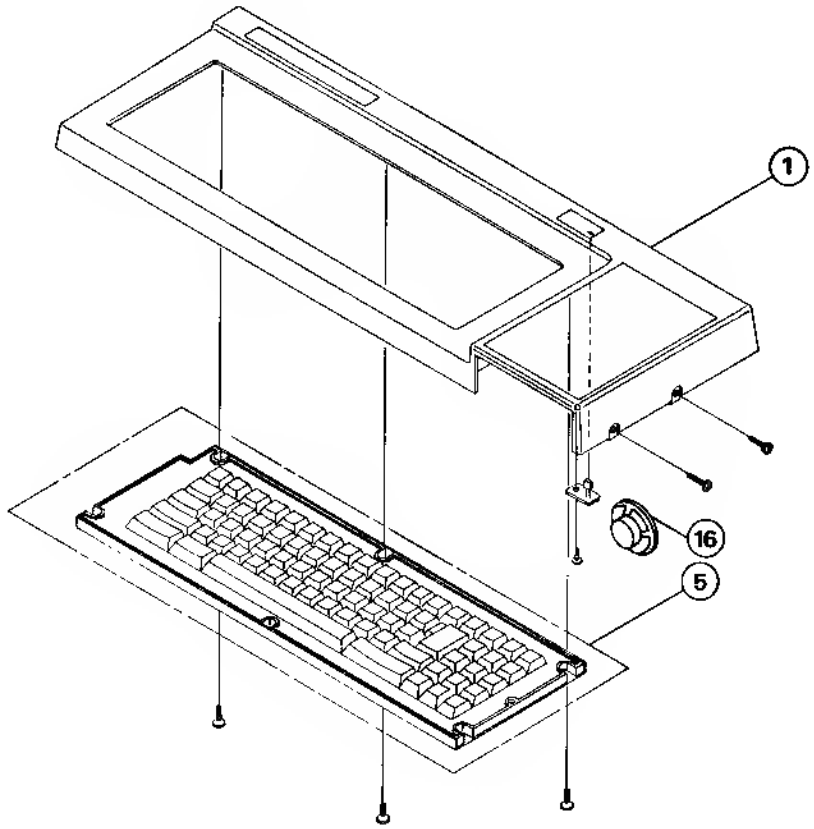

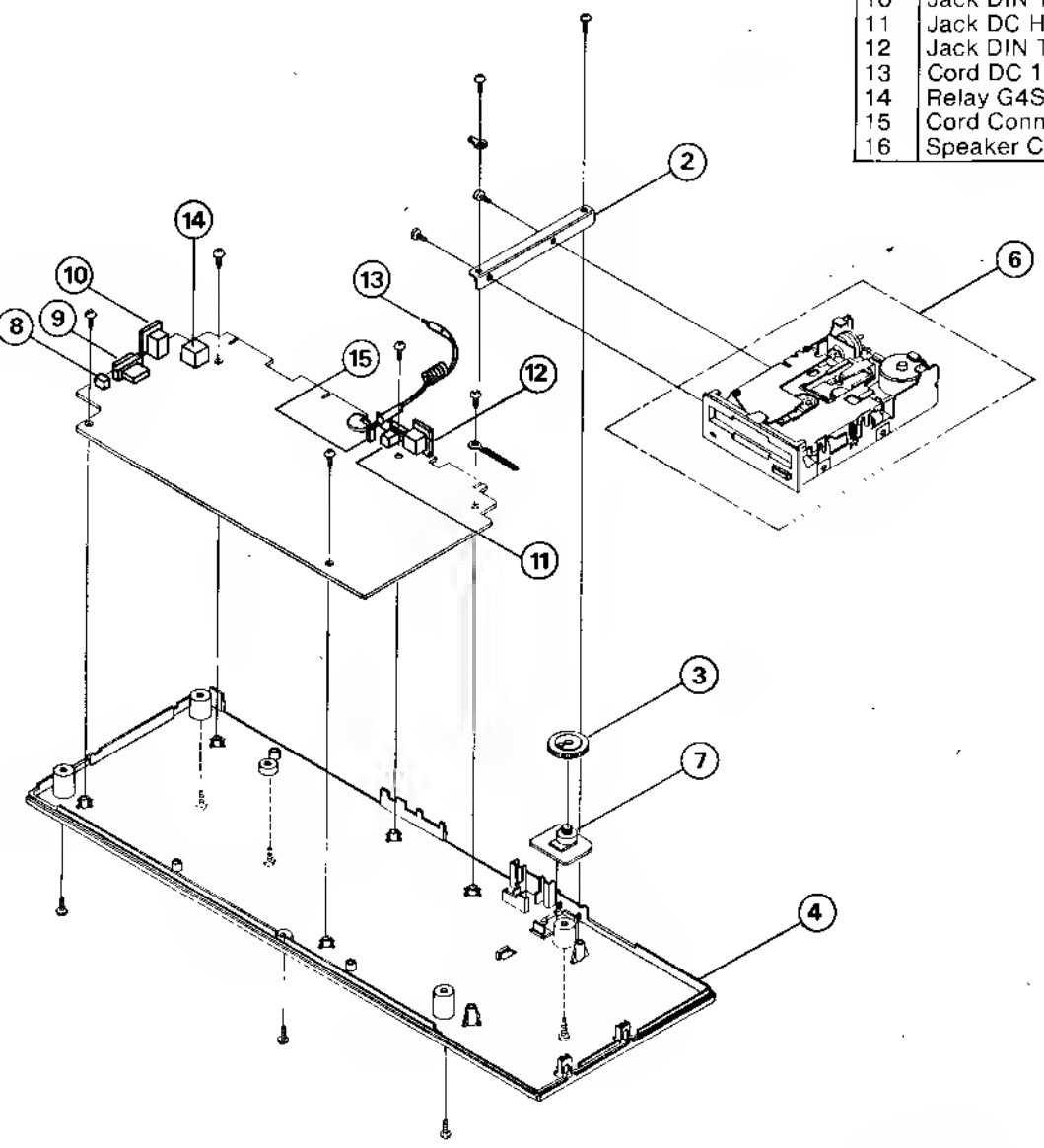

KEYBOARD PARTS LIST

Sym	Description	Part No.
1	Cabinet Top Assembly	170855
2	Frame FDD	170856
3	Knob Volume	170806
4	Cabinet Bottom	170857
5	Keyboard Assembly ESU-244	170858
6	Compact Floppy Disc Drive EME-155	190005
7	Volume Rotary K121L0Z0T-20KB	170807
8	Jack RCA 3.5 HSJ1061-01-440	170022
9	User Port Socket HXC0730-01-010	170023
10	Jack DIN TCS4450-01-101	170850
11	Jack DC HEC0470-01-630	170024
12	Jack DIN TCS4460-01-1011	170025
13	Cord DC 14550401	170822
14	Relay G4S-1112P-1-B-19	170123
15	Cord Connector 8W6Q004A	170862
16	Speaker C040K01K2451	170124

CPC6128 — BASIC HARDWARE ANALYSIS

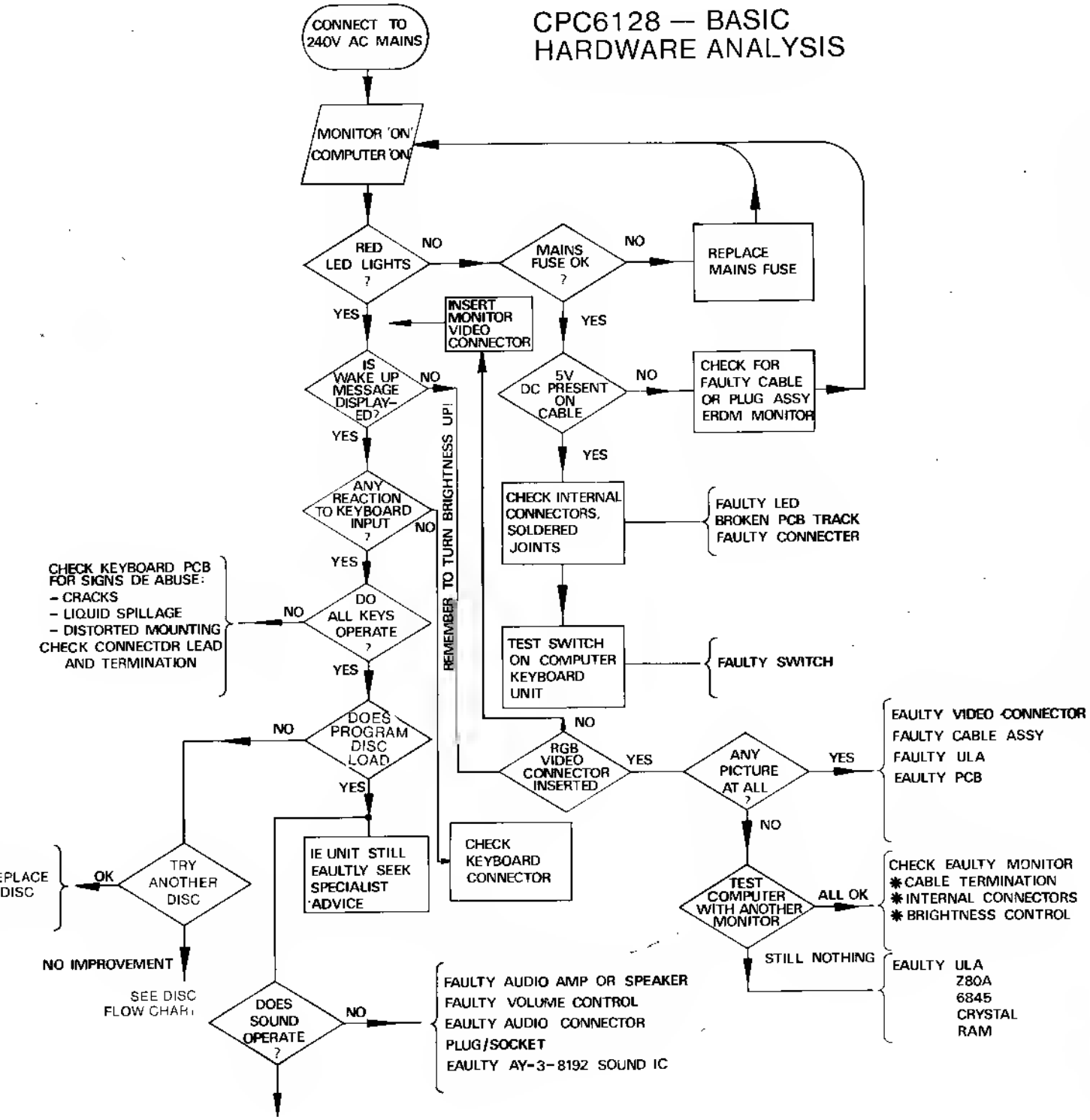

Full diagnostic tests on the C.P.U. can be carried out using the Amstrad RP2 Test Pack.
Please contact Amstrad PLC for information on same.

FUNCTION DIAGRAMS

IC114

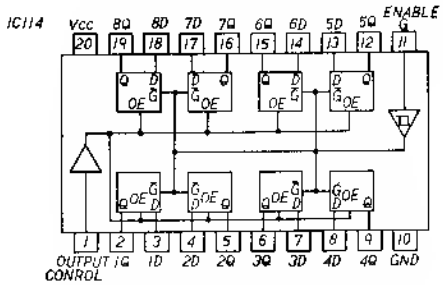

IC115

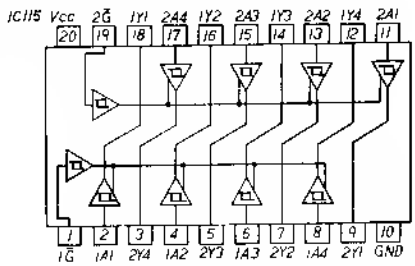

IC104,105
IC109,113

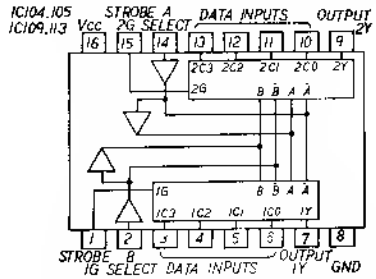

IC110

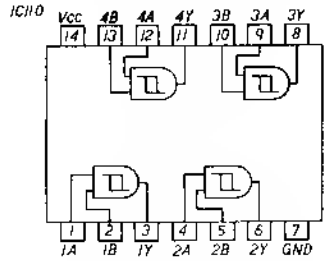

IC101

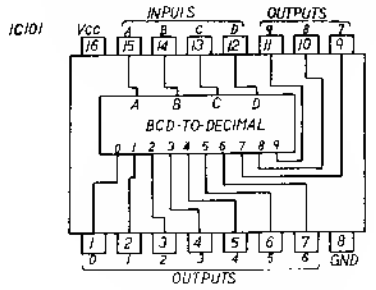

IC112

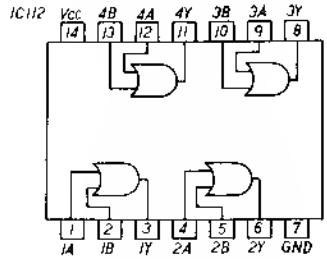

IC106

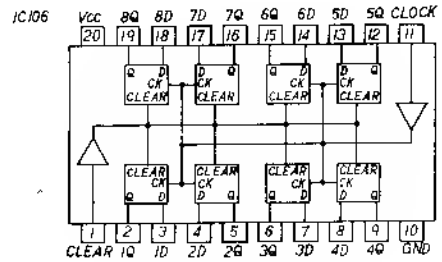

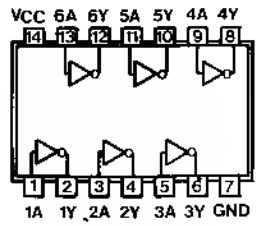

CPC6128 FUNCTION DIAGRAMS

FUNCTION EOR A MICROCOMPUTER AND IC'S

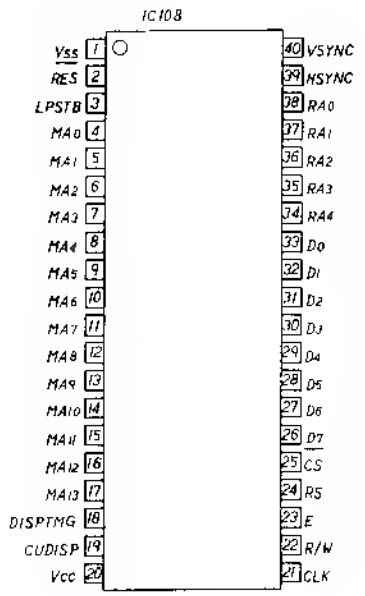

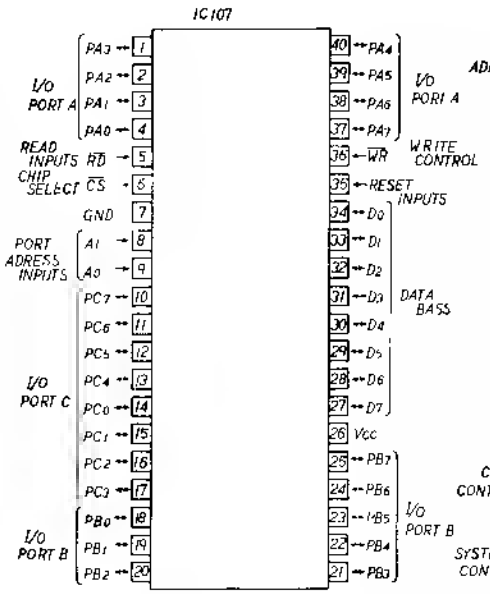

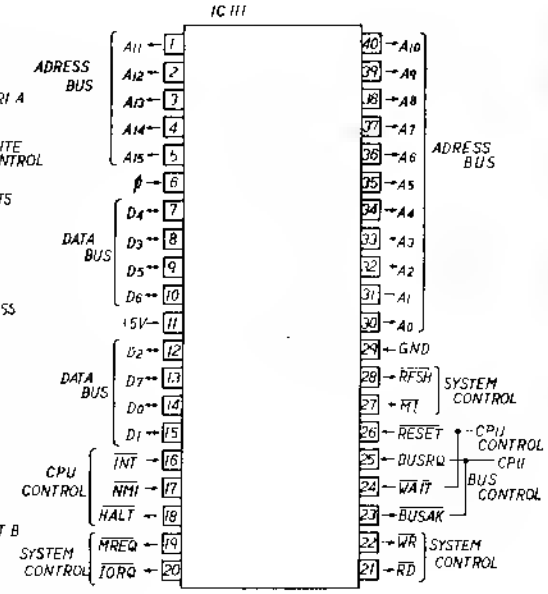

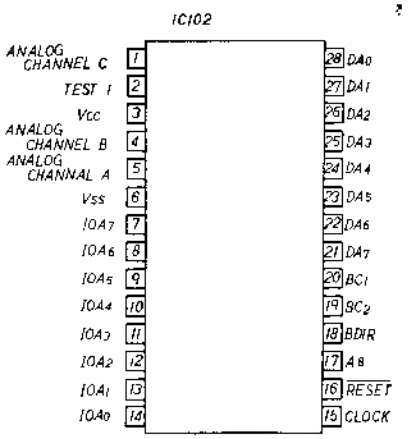

KEYBOARD SW.

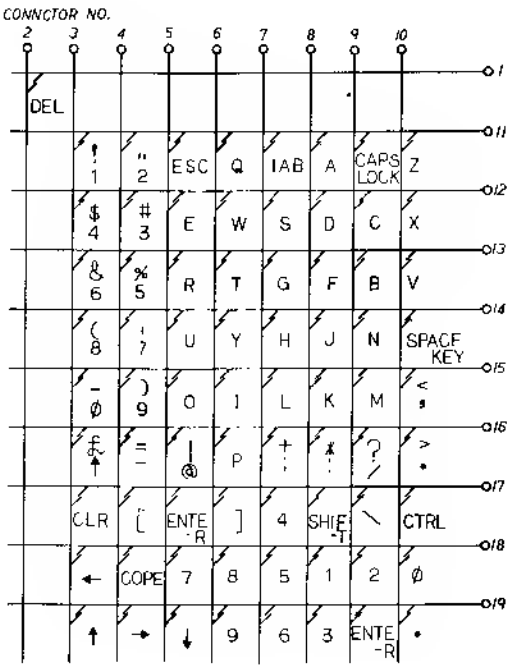

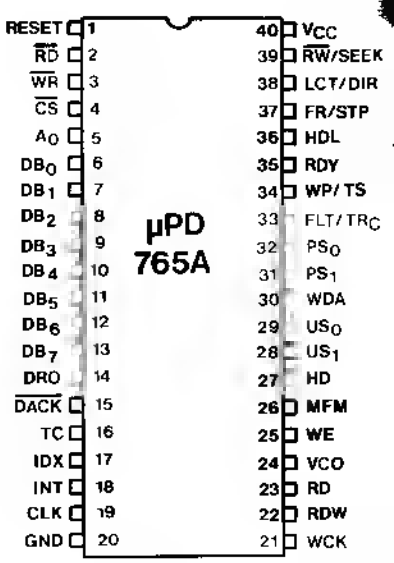

Software Errors

If a drive fault is reported the fault may be a software problem. Before investigating the drive please carry out the following checks to ensure it is not a software problem.

Detection and Correction of "Soft Errors"

Soft errors are usually caused by the following reasons.

1) Random external noise of several usec or less.

2) Minute off-tracking and shifting of write timing that are not detected during the write operation which can cause the soft error during the read.

To remedy such soft errors, take the following procedures at the controller side.

1) Repetitive reading on the track by 10 times or more until the data is restored.

2) When the data is not restored by step 1. access the head to the adjacent track in the same direction as move previously, and Ihereafter return the head to the original track.

3) Repeat the step 1.

4) If the data is not restored by the above steps, the error cannot be remedied

Write Error

When an error is caused during the write operation, the error is usually detected during the next rotation through the read operation called "Write check".

To correct the error, repeat the write operation again and carry out the Write check.

If the result is still incorrect even after the write operation is repeated more than 10 times, either the disc or the drive are working incorrectly. To find out the trouble source, carry out the read operations with another track. Should the error still be found, change the disk and repeat the above procedures. Should error still be found, the drive should be considered defective. If the error is removed, the original disk must be defective. Discard it.

Seek Error

1) Step motor or step motor drive circuit is defective.

2) The torque of the carriage is not correct.

Restoration procedures from the seek error.
Make the re-calibration to the track OO. Then, carry out the re-seek to the original track.

Notes:
1) Always ensure the head is clean.

2) Index/Sector Factor (Ready Defect)

As the unit has Optional Read Output
It is normally not ready until 2 revolutions are made after the disk insertion.

Diagnostic Flow Chart

This chart must be used in conjunction with the Alignment Procedures.

This chart is for information only and does not guarantee an exact diagnosis. For warranty purposes any faulty drive mechanism must be returned to Amstrad for replacement. Service Agents should not attempt any repairs on the mechanism or to its P.C.B. P.No. 30001.

3—A

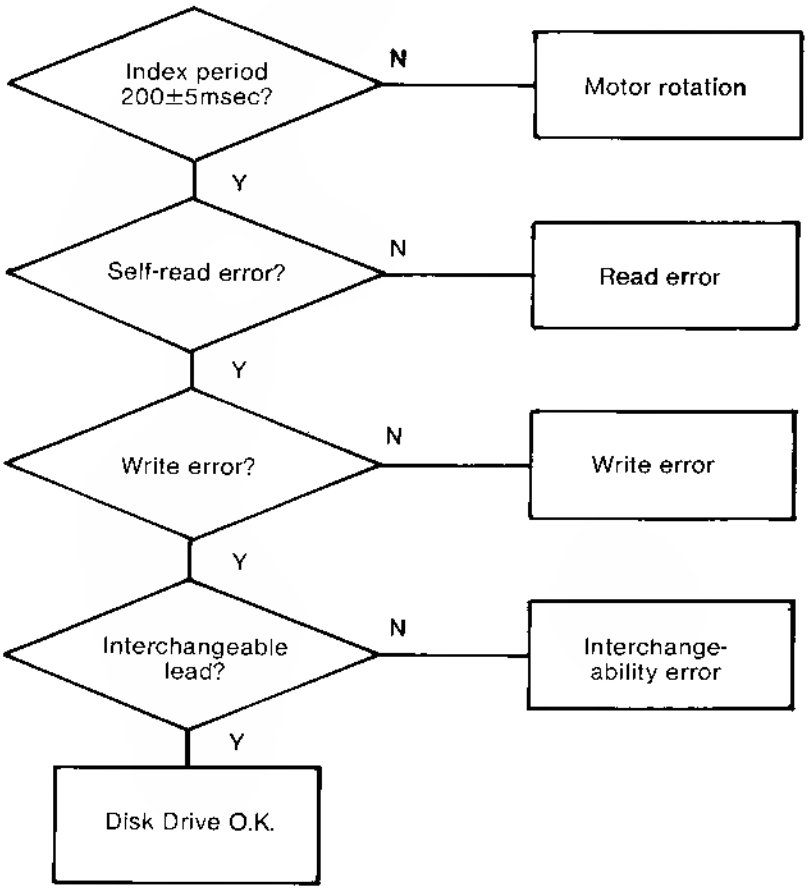

FLOW CHART (cont)

3—B

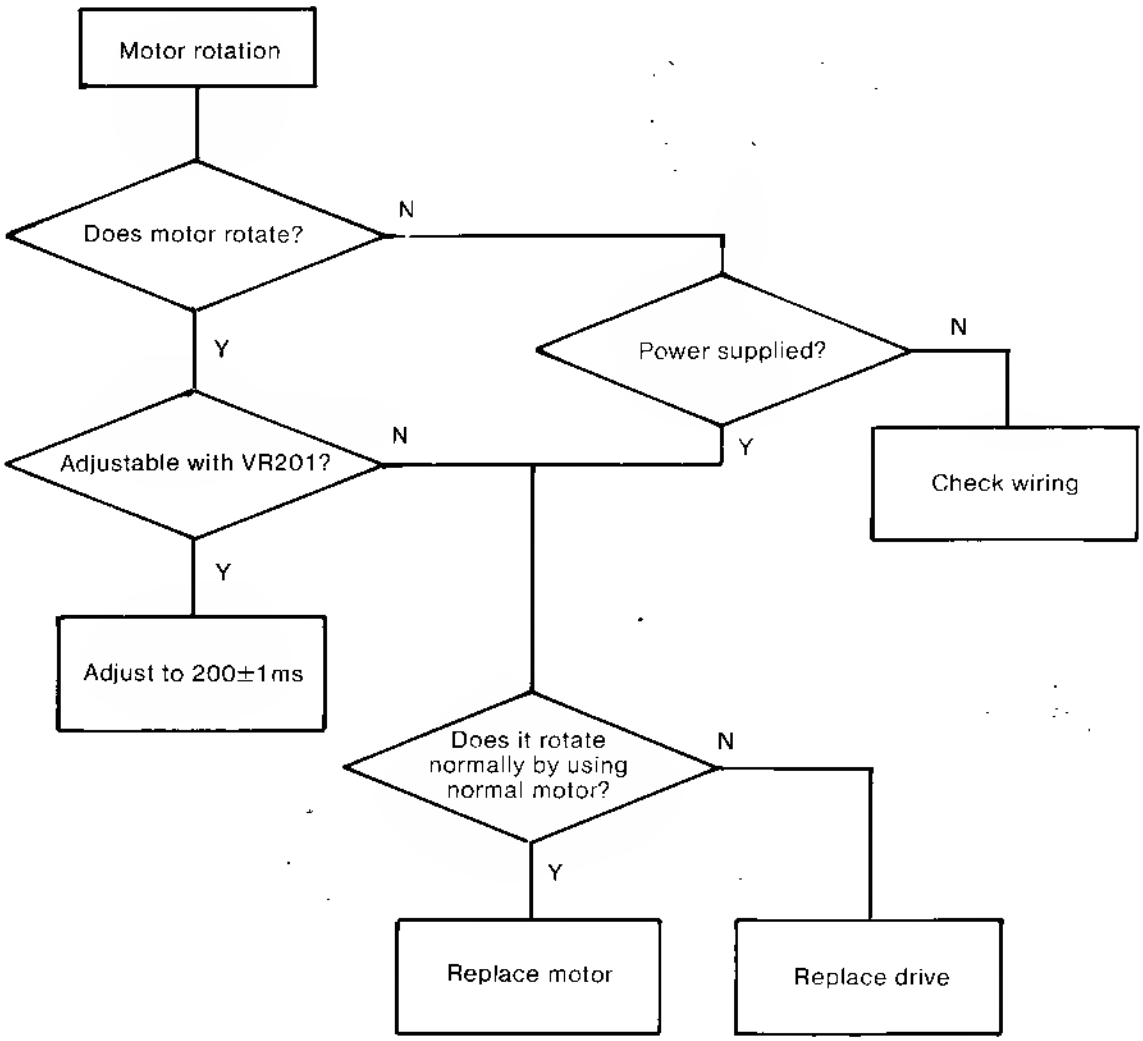

FLOW CHART (cont)

3—C

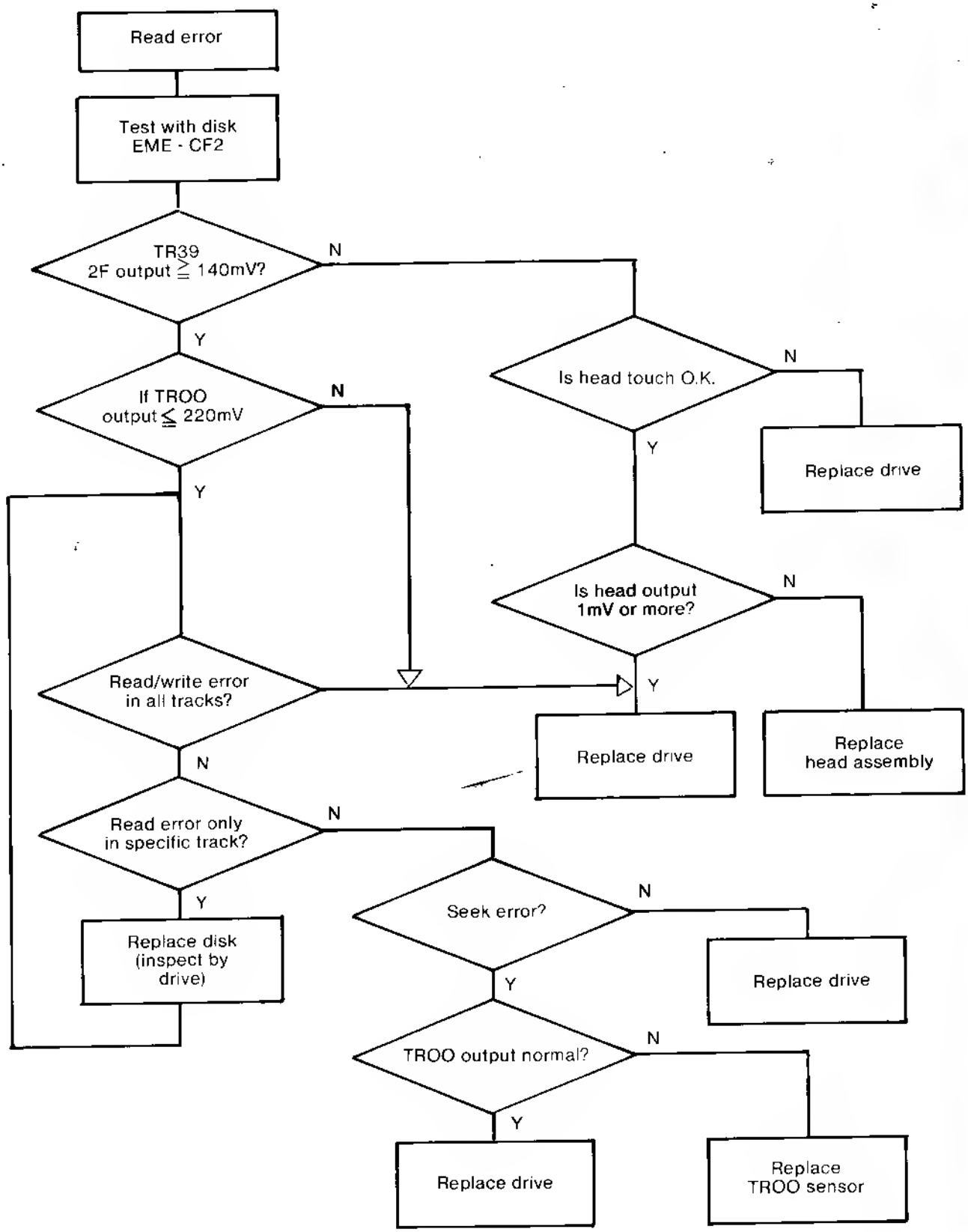

FLOW CHART (CONT)

3—D

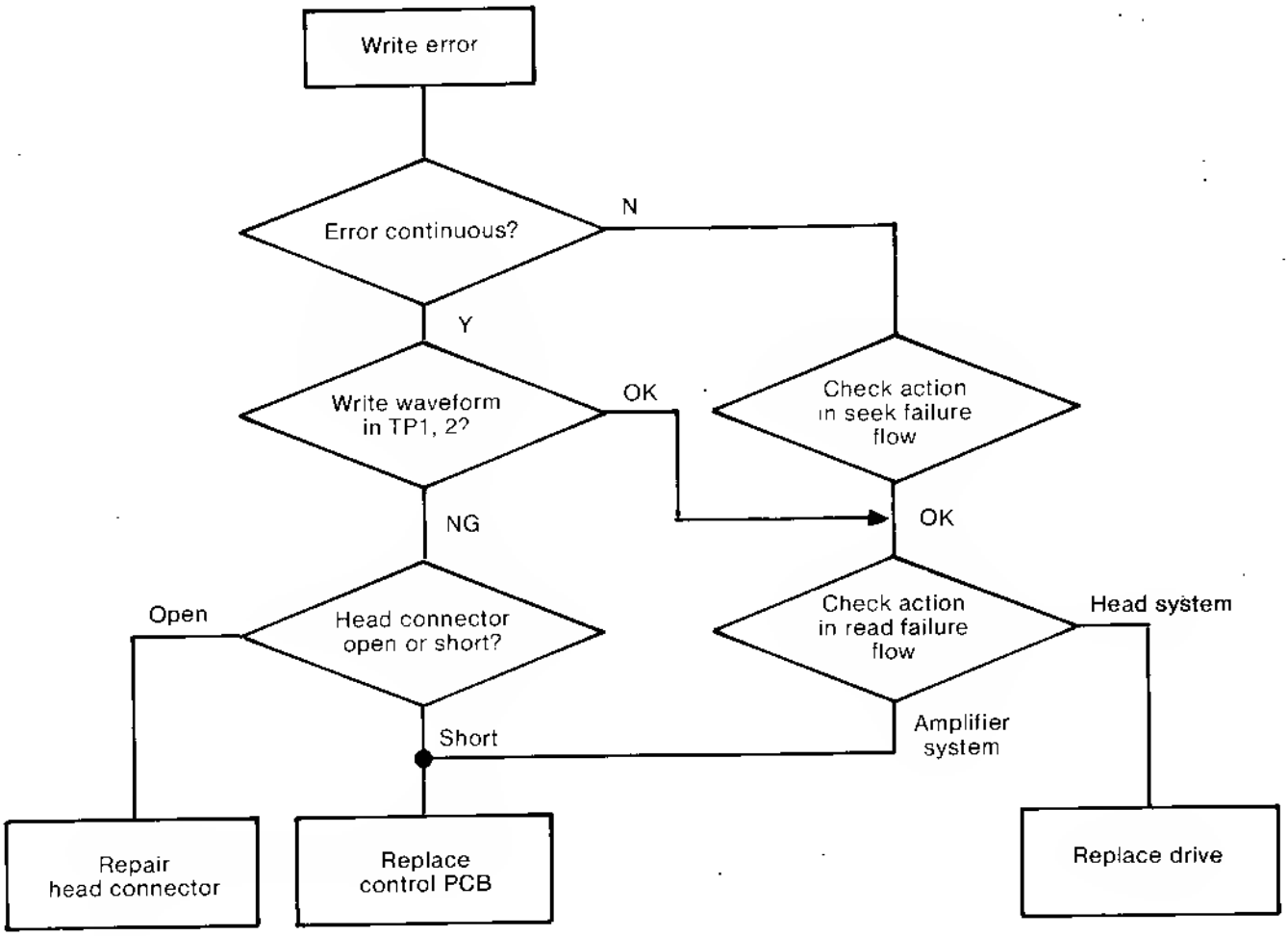

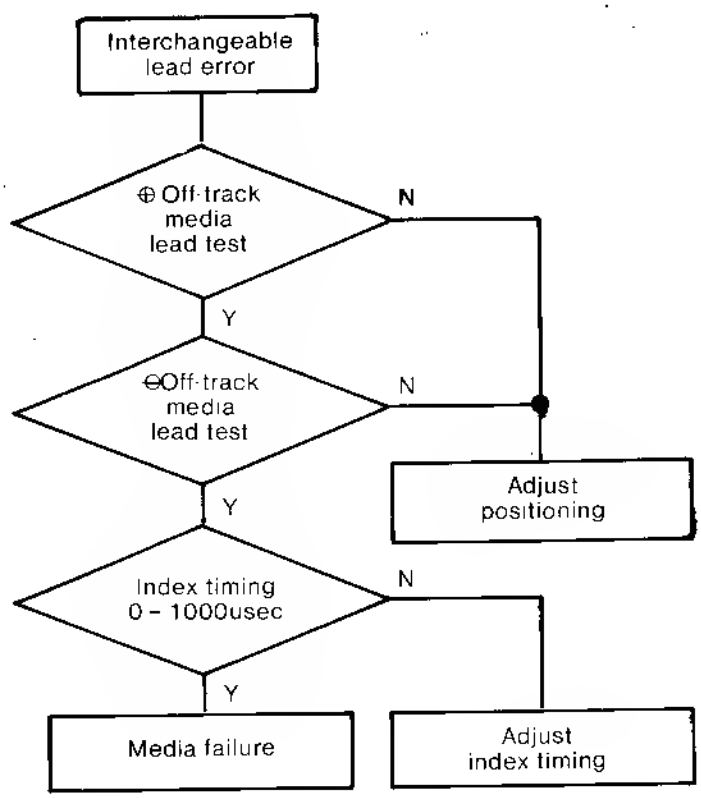

The data contained in the following 4 pages is for information only. Service Agents must not carry out any repair or adjustment to the Drive mechanism and its associated PCB 30001 during warranty. Fauity mechanism must be returned to AMSTRAD for exchange.

Alignment Checks

Please use this this information in conjunction with the diagnostic flow chart.

Equipment required: Double Beam Scope; EME - CF2 Test Disk (please refer to **disk notes for usage**).

The following checks can be carried out in routine servicing. If the wave patterns do not appear this confirms a fault with the mechanism. Before attempting any replacement check these waveforms thoroughly.

Content of adjustment and checking	CE DISK EME CF2
1. Radial adjustment by use of Track 19 (Fig. 1).	○
2. Adjustment of the index burst by use of Track 39 (Fig. 2).	○
3. Azimuth check by use of Track 39 (Fig. 3-4).	○

List of Test Points

Test point	Name of signal
TP 1	Read signal of filter outlet
TP 2	Read signal of filter outlet
TP 3	Signal ground
TP 5	TROO sensor output
TP 9	Index signal
TP 11	Signal ground

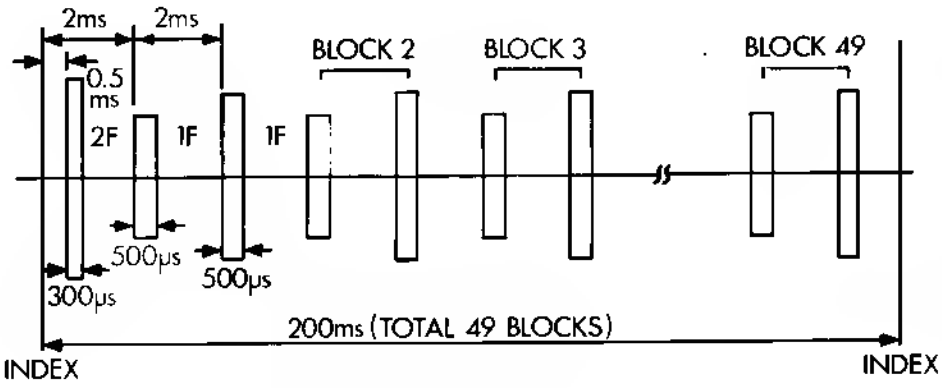

Fig.1 Waveform of T19 (Servo pattern)

ALIGNMENT CHECKS

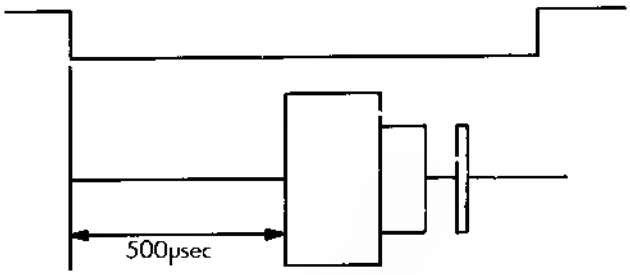

Fig. 5-1 Index burst waveform

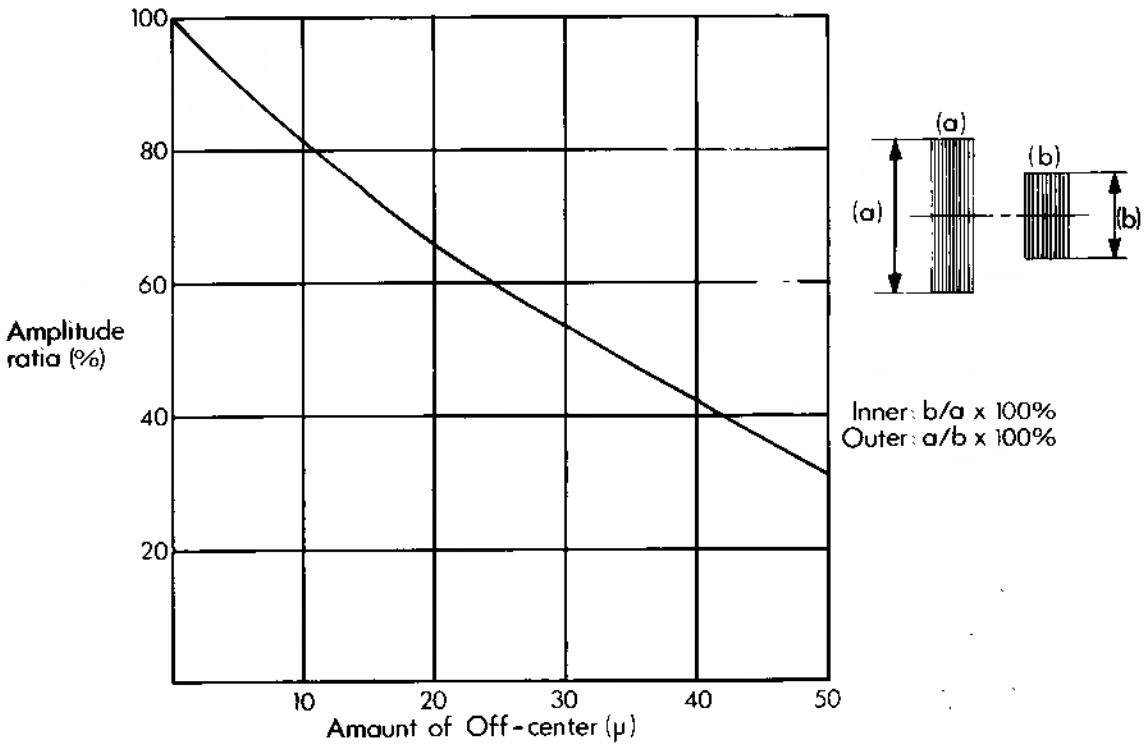

Fig. 5-2 Off-centre calibration curve
(Effective width ot read head is 180u)

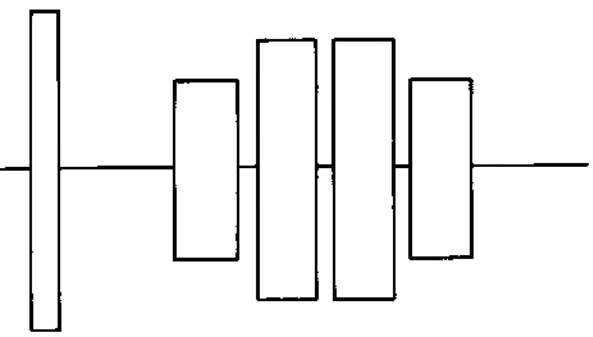

Fig. 5-3 Azimuth burst

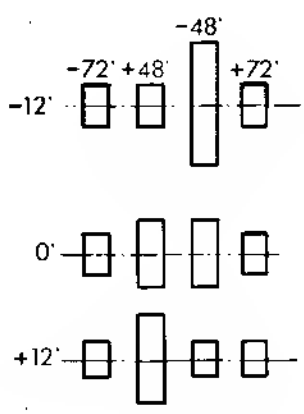

Fig. 5-4 shows azimuth burst in the cases ot azimuth -12', 0' and +12.

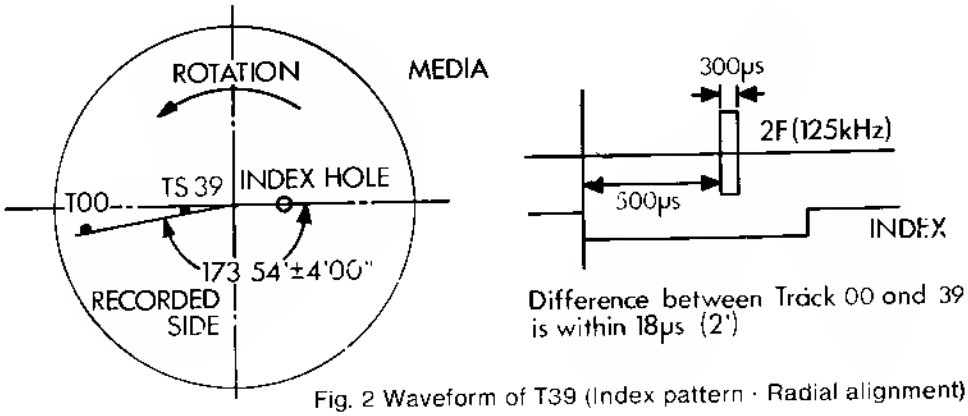

Fig. 2 Waveform of T39 (Index pattern · Radial alignment)

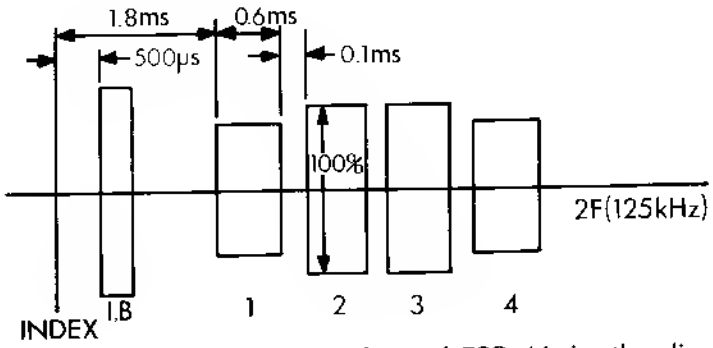

Fig. 3 Waveform of T39 (Azimuth, alignment)

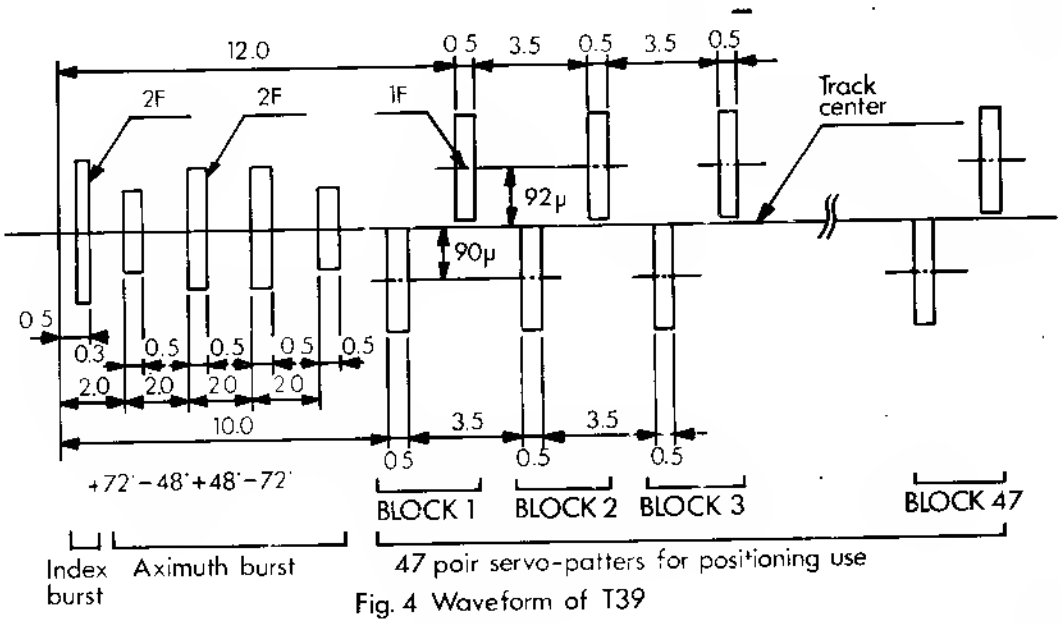

Fig. 4 Waveform of T39

ALIGNMENT CHECKS (cont)

1) Check Positioning

1) Load CE Disk.
2) Set up track OO, Motor ott.
3) Scope to TP5.
4) Adjust OO Sensor (8 on Fig. 6) so that scope shows correct difference as Fig. 2.

2) Adjustment of Index Timing

1) Load the CE Disk (refer to disk into)
2) Step the disk to the track 39.
3) Synchronise the oscilloscope by TP9 (INDEX). Set the time base to 0.1msec/DIV.
4) Connect the probe to TP1.
   Connect the ground probe to TP3 and TP11 (ground) ot PCB.
   Set the input to AC and set the vertical axis to 20mV/DIV.
5) Measure timing between sweep start and an initial data pulse. It should be 500 usec ±500 usec. When the timing is not within this range, proceed with the following adjustment. (Refer to Fig. 5·1).
6) Loosen the two screws fixed LED printed board. Adjust the position ot LED printed board so that the timing is 500 usec ± 100 usec.
7) Re-check the timing.
8) Seek to the track OO and make sure that the timing is within 500 usec ± 200 usec. Tighten the screws. (Fig. 5 · 1).

3) Check of Head Output

This check is effective only when making write and read check as described below. If the output level is less than the prescribed output, clean the head before check.
Disk used for this check must be in good condition.

1) Load the CE Disk.
2) Select track 39.
3) Connect one ot the probes of the oscilloscope to TP1 ot the printed circuit board, another probe to TP2, and the probe to ground to TP3, TP11 (ground)
Invert one channel, and set it to Add input, set input to AC, and set the vertical axis to 50mV/DIV and the horizontal axis to 20msec/DIV.
4) Make sure tha average output level is the following value or more: 140 mV p-p (SN 25dB or more)
   If the output is less than the above-described value. replace the head.

4) Adjustment of Positioning

1) Load CE disk.
2) Select Track 19.
3) Monitor the output in the same way as the head output inspection.
   Calculate the off-track amount in reference to the calibration graph. showing the interrelation between the burst amplitude ratio and off-track amount. (Refer to Fig. 5·2).
4) The average ot amplitude ratio should be below 26 um.
   It it is not within this range. make the following adjustment.
   i) Loosen the bolt ot the rotation stopper which fixes the screw shatt (Fig. 6-3).
   Rotate the screw shatt and adjust it in such a way that the amplitude ratio may become below 15 uM. Tentatively set the bolt at that position.
   ii) Make the to track step to the inner and outer circles and bring it to the original position. Make sure that the adjustment is all right. Then, tighten the bolt.

5) Confirmation of Head Azimuth

1) Load the CE Disk
2) Select Track 39.
3) Synchronise the probe of the oscilloscope by TP9 of PCB and connect another probe to TP1, and the probe ground to TP3, TP11 (ground). Set the input to AC, the vertical axis to 10 mV/DIV, and the horizontal axis to 0.5 msec/DIV. Make sure that the two outside burst waveforms are smaller than two inside burst waveforms as shown in Fig. 5-3.
   Note: Signal preceding the azimuth burst is the index burst.
   If the azimuth is still incorrect reeplace the head assembly.

CPC6128 MAIN PCB

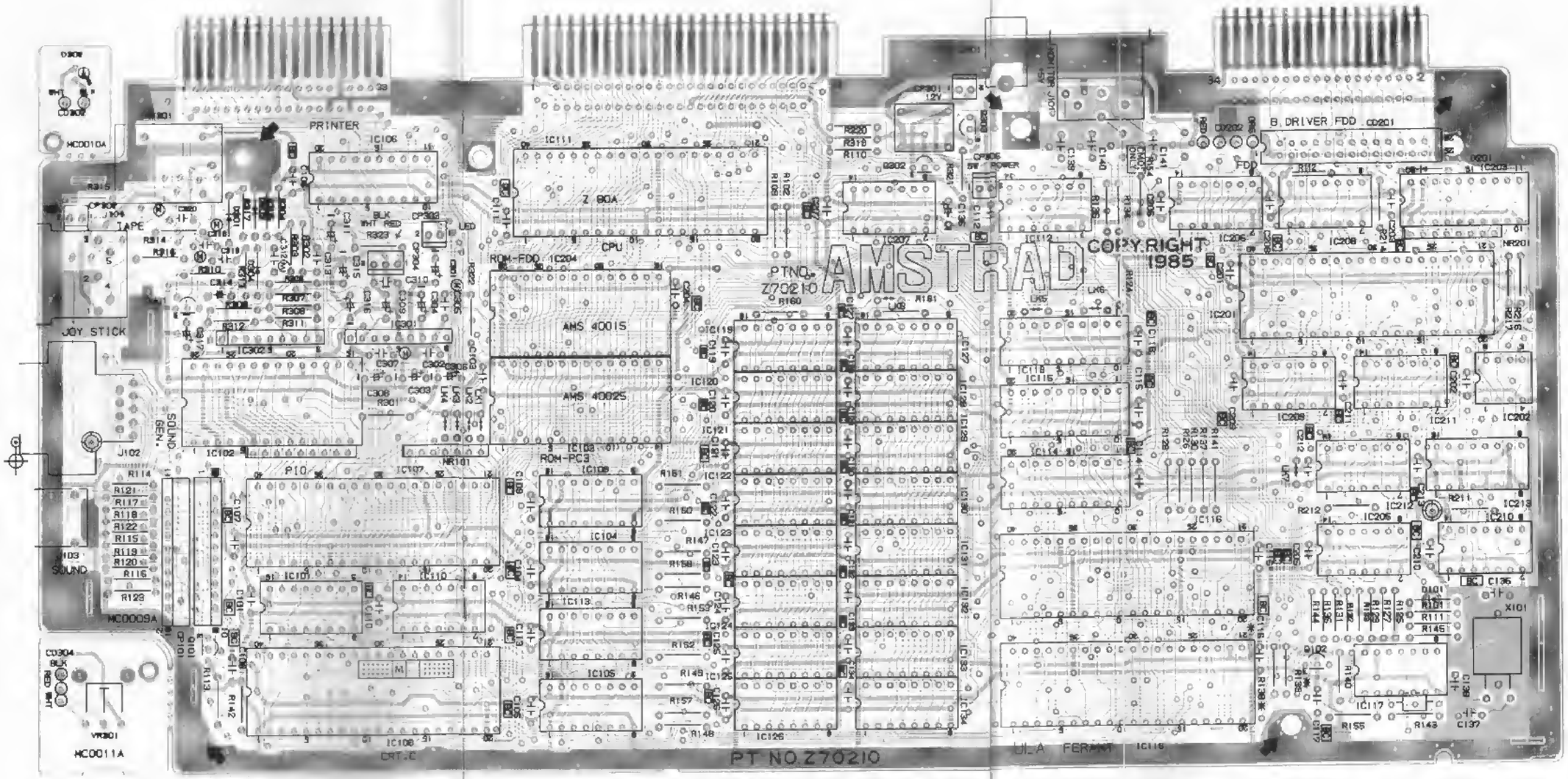

CPC6128 CPU CIRCUIT DIAGRAM

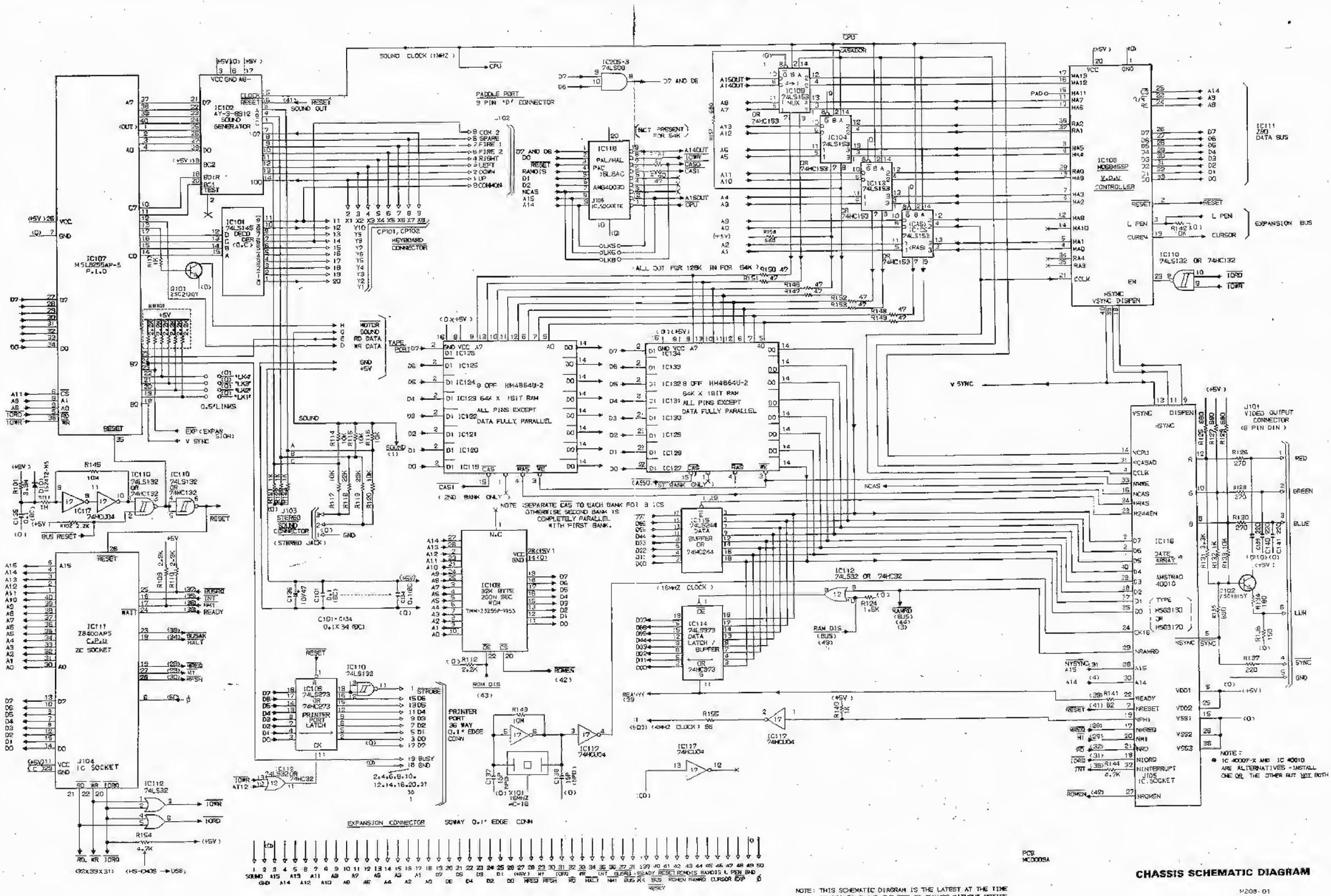

CHASSIS SCHEMATIC DIAGRAM

M208-01
1-3583

NOTE: THIS SCHEMATIC DIAGRAM IS THE LATEST AT THE TIME OF PRINTING AND SUBJECT TO CHANGE WITHOUT NOTICE.

ELECTRICAL PARTS LIST

Circ. Ref.	Description	Part No.
Carbon Film Resistors		
47ohm	R146-153, 161, 162	10020
56ohm	R155, 306	10022
82ohm	R141	10030
150ohm	R136	10036
180ohm	R134	10037
220ohm	R137	10040
270ohm	R126, 128, 130	10042
560ohm	R317	10050
680ohm	R125, 127, 129, 135, 157, 158, 301	10052
1kohm	R113, 121-123, 132, 140, 211, 212, 216, 313, 315, 321	10061
1k5ohm	R124	10065
2k2ohm	R102, 109, 110, 112, 214	10069
3k3ohm	R131	10073
4k7ohm	R144, 310, 323	10077
10kohm	R114-117, 120, 133, 142, 217, 309, 312	10085
18kohm	R308, 311	10091
22kohm	R118, 119, 304, 305	10093
47kohm	R302, 303, 307, 319, 320	10101
470kohm	R314	
1Mohm	R111	10147
3M3ohm	R101	170867
10Mohm	R143, 145	170868
4ohm7 ¼W	Fuse R322	170866
100ohm ½W	R316	1400183
Ceramic Capacitors		
15pF	C137, 138	170869
220pF	C139-141, 310	400107
270pF	C313	170126
470pF	C306	24004
0.1uF	C101-135, 201-213	24020
Electrolytic Capacitors		
1uF/50V	C309, 311, 314, 317, 318	20062
22uF/10V	C308	20025
47uF/10V	C136, 303, 306	1400244
100uF/10V	C301, 304	20028
100uF/16V	C315	20028
Polycarbonate Capacitors (All working voltage 50V D.C.)		
0.001uF	C312	170217
0.01uF	C305	170128
0.047uF	C318	1409178
0.068uF	C302	170129
0.1uF	C319, 320	170851
Diodes		
D101, 303, 304	1S2472-HS	170115
D201	DS442XFA5	170816
D301	10E1	170865
D302	SLP-165B (R)	170866

Circ. Ref	Description	Part No
IC's		
IC101	HD74LS145	170101
IC102	AY-3-8912	40001
IC103	TMM-23256P-1953	40025
IC104, 105, 109, 113	HD74LS153	170103
IC106	HD74LS273	170104
IC107	M5L8255AP-5	170105
IC108	HD6845SP	170106
IC110, 210	HD74LS132	170107
IC111	Z8400APS	40080
IC112, 207	HD74LS32	40013
IC114	HD74LS373	170108
IC115	HD74LS244	170109
IC116	HSG3130/3170	40010
IC117	TC74HCU04P	40008/A
IC118	PAL 16L8AC	40031
IC119-134	MSM3764-20RS	170110
IC201	UPD765AC-2	40018
IC202	FDC9216BT	170812
IC203	SN74HC240N	170863
IC204	TMM-23128P-1851	40015
IC205	DN74LS08	40011
IC206, 208	DN74LS38	40019
IC209	DN74LS136	40016
IC211	DN74LS27	40012
IC212	DN74LS74	40014
IC213	TC74HC161P	170864
IC301	LA4140	170111
IC302	LA6358S	170814
Transistors		
Q101	2SC2120Y	170113
Q102, 301, 302	2SC1815Y	170114
W303	2SC950Y	170448
Miscellaneous		
J101	Jack DIN	170025
J102	Socket D Sub 9	170023
J103	Jack RCA3.5	170022
J104, 105	Socket IC 20 Pin DIL	170021
J106	Socket IC 10 Pin DIL	170865
J301	Jack D.C.	170024
J302	Jack DIN	170850
VR301	Vol. Rot. 20k	170807
CD302	D.C. Cord	170882
CD201	Cord Connector	170862
FDD201	Compact Floppy Disc Drive EME-155	190005
NR101	R. Network Exb P86222J	170860
NR201	R. Network Exb P87681J	170861
RY301	Relay G4S-1112P-1-B-19	170123
SP301	Speaker CQ40KQ1K2451	170124
X101	Crystal HC-18RW 16MHz	170859

No part numbers are given for any parts on PCB30001, should there be any electrical fault with that PCB Service Agents should return the whole Disc Drive Mechanism complete with the PCB for replacement.

GT65 CABINET EXPLODED VIEW

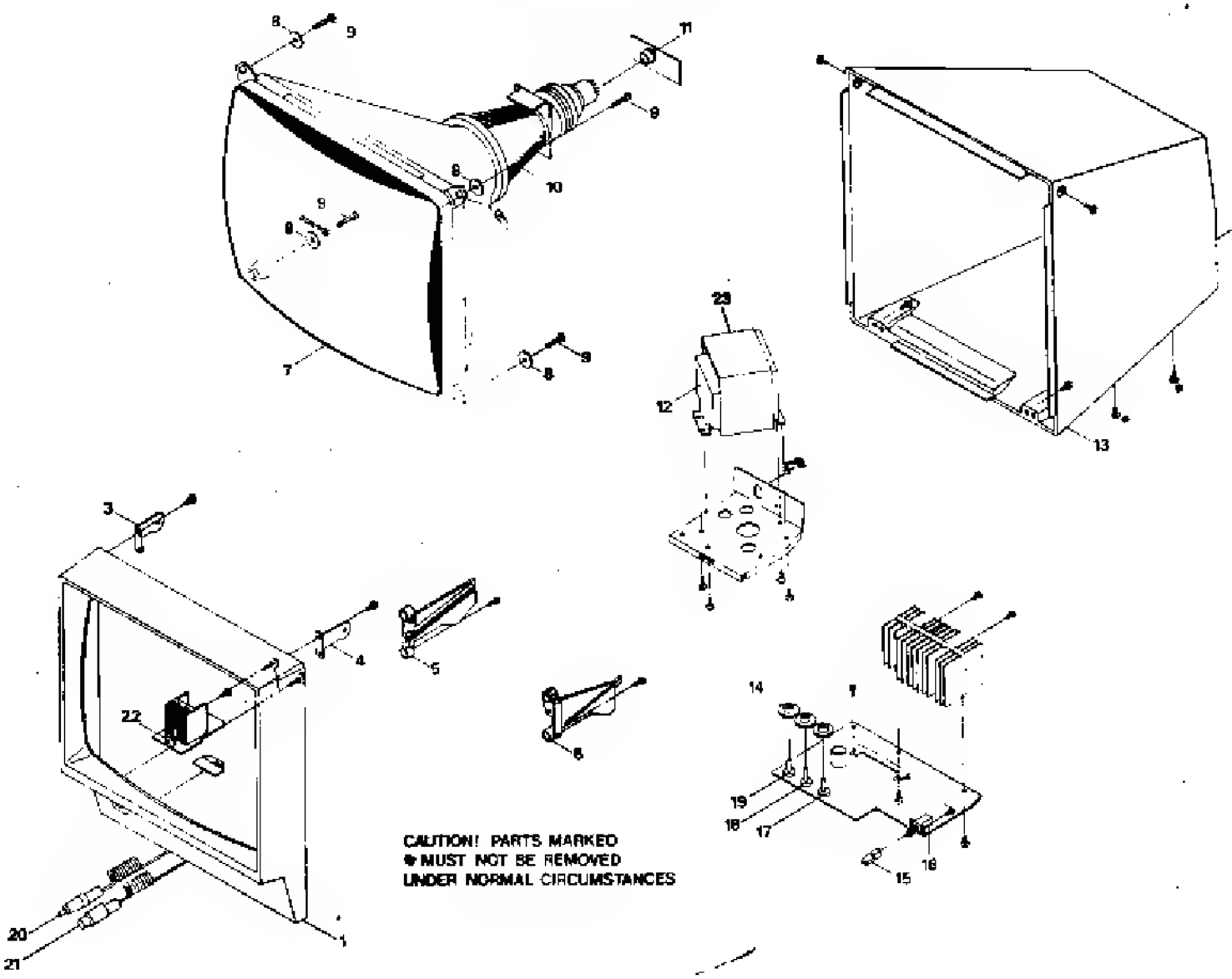

GT65 CABINET PARTS LIST

Sym	Description	Part No.
1	Front Cabinet	170831
2	Cable Clamp	170502
3	Bracket Cabinet (L)	170504
4	Bracket Cabinet (R)	170503
5	Bracket P.C.B. (L)	170505
6	Bracket P.C.B. (R)	170506
7	C.R.T. Green	170507
8	Metal Washer C.R.T.	170508
9	Fixing Screw C.R.T.	170509
10	Deflection Yoke	170510
11	C.R.T. Socket	170511
12	Power Tx	S/170832
13	Rear Cabinet	170513
14	Control Knobs	170514
15	Button Power	170515
16	On/Off Switch	170516
17	V. Hold Pot.	170833
18	Contrast Pot.	170518
19	Brightness Pot	170519
20	D.C. Cord	170316
21	DIN Cord	170317
22	D.C. Jack	170834
23	u Metal Shield	170512/SH

GT65 CIRCUIT DIAGRAM

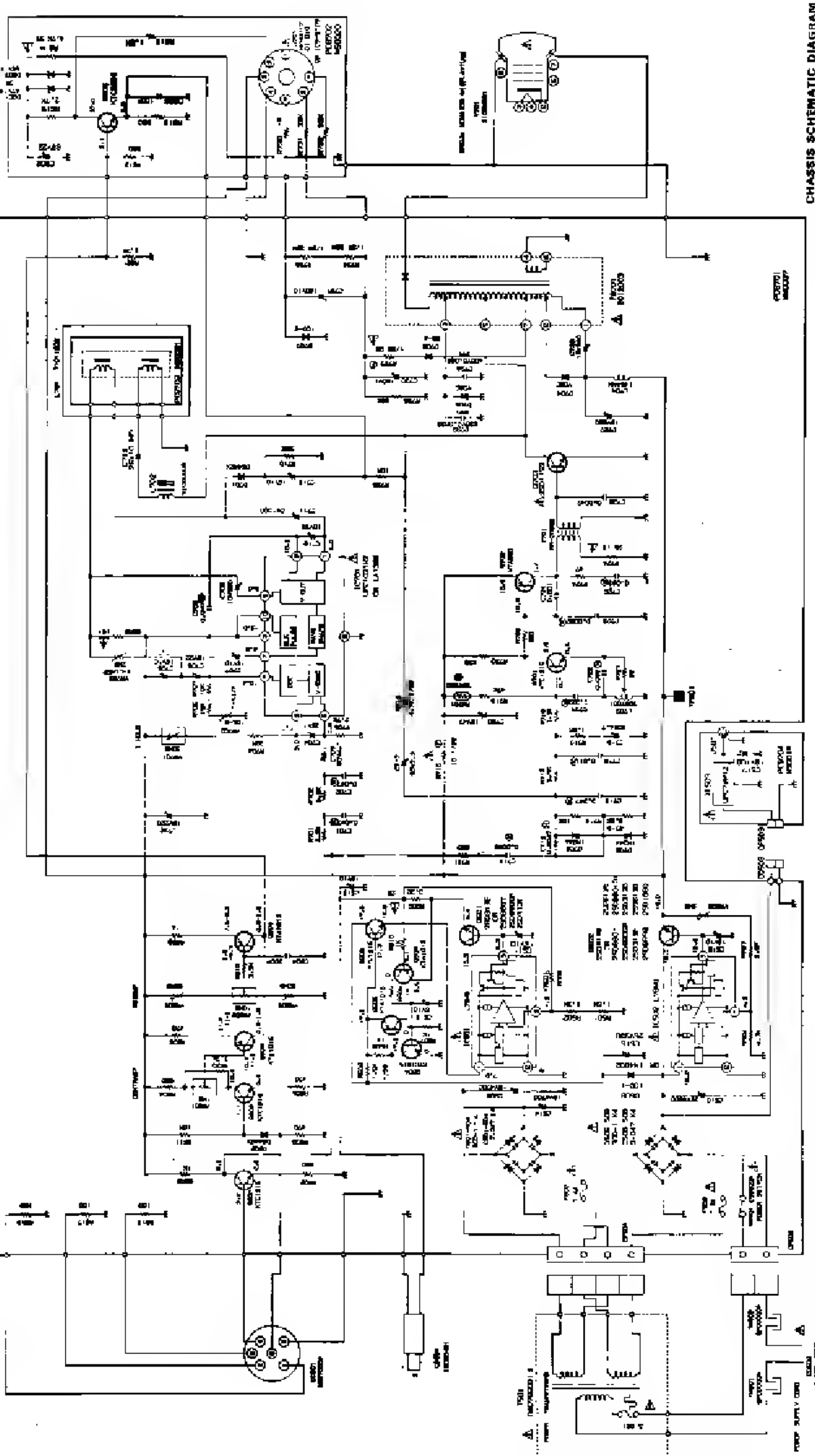

GT65 VOLTAGE DATA

CHASSIS SCHEMATIC DIAGRAM

IC701 · UPC1031 H2
1 - 5.99V DC
2 - 11.98V DC
3 - 10.86V DC
4 - 10.45V DC
5 - 0.61V DC
6 - 2.93V DC
7 - 5.26V DC
8 - 0V DC
9 - 6.0V DC
10 - 11.99V DC

IC501 · L78MG
1 - 20.1V DC
2 - 0V DC
3 - 5.5V DC
4 - 5.0V DC

IC502 · L78MG
1 - 20.7V DC
2 - 0V DC
3 - 12.5V DC
4 - 4.9V DC

	E	B	C
Q501	5.1V DC	5.5V DC	13.6V DC
Q502	12.0V DC	12.6V DC	20.6V DC
Q605	2.0V DC	2.2V DC	39.5V DC

GT65 MAIN PCB

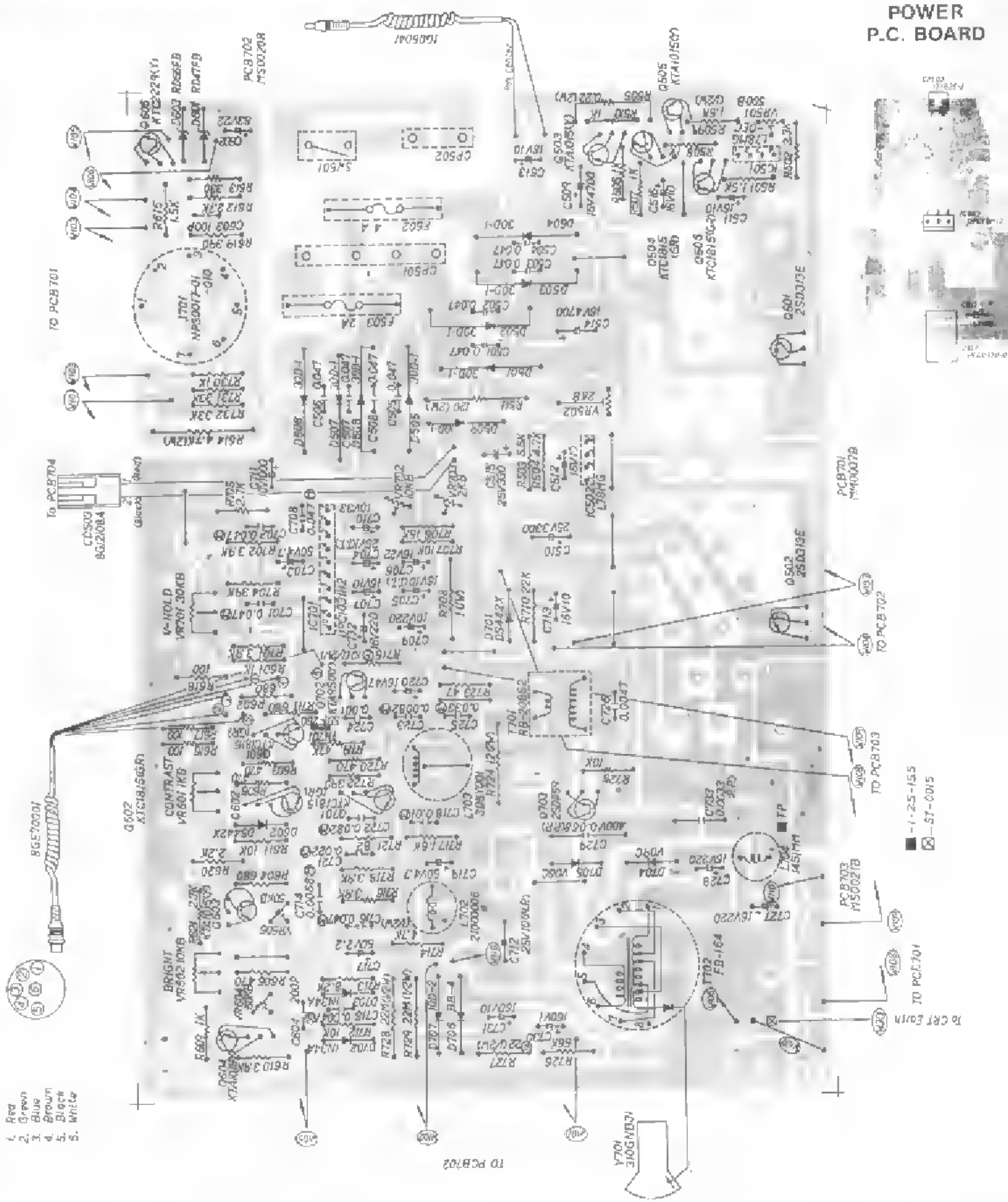

GT65 ALIGNMENT INSTRUCTIONS

STEP	FUNCTION	SIGNAL IN	SIGNAL OUT	METHOD	REMARKS
1	5V Adjustment.	Monitor Switched on	A.V.O. across C519.	Adjust VR501 to obtain 5V.	
2	12V Adjustment	Monitor switched on.	Emitter of Q502 & Earth.	Adjust VR502 to obtain 12V.	
3	H. Hold.	Monitor switched on.	Monitor Screen	Connect Frequency Counter to CRT Heater. Adjust L703 to obtain 15625Hz on Frequency Counter.	
4	V. Size & Linearity	Page Program for Graphics.	Monitor Screen	Top of the page can be adjusted with VR703 and Bottom of the page can be adjusted with VR702.	The adjustments are Linearity & V. Size respectively.
5.	Centering Adjustment.	Program Border - 26.	Monitor Screen.	Adjust the magnet on the back of the neck to centre the border.	

GT65 ELECTRICAL PARTS LIST

Value	Circuit Reference	Part No.
Carbon Film Resistors (¼W)		
47ohm	R723	10021
82ohm	R721	10030
100ohm	R616·618	10032
330ohm	R613	10044
390ohm	R619, 722	10046
470ohm	R603-605, 606, 720	10048
680ohm	R602, 604, 711	10052
1kohm	R506-508, 610, 601, 609, 730	10061
1k5ohm	R501, 717	10065
2k2ohm	R620	10069
2k7ohm	R612, 621, 705	10068
3k3ohm	R502	10073
3k9ohm	R610, 701, 702, 716, 718	10075
4k7ohm	R504, 714	10077
5k6ohm	R503	10079
8k2ohm	R713	10083
10kohm	R611, 707, 712, 725	10085
15kohm	R706	10089
22kohm	R710	10093
33kohm	R731, 732	10097
39kohm	R704	10099
47kohm	R719	10101
56kohm	R726	10103
Carbon Film Resistors (½W)		
22ohm	R727	170601
1k5ohm	R509, 615	1422126
22Mohm	R728, 729	170602
Metal Film Resistors		
1ohm/1W	R709	**170603**
0.22ohm/2W	R505	**170604**
4ohm7/2W	R614	**170605**
12ohm/2W	R724	**170606**
Fuse Type Resistor		
10ohm/½W	R715	809256
Ceramic Capacitors		
100pF	C603	1422144
200pF	C604	400107
0.001uF	C724	1400125
0.0047uF	C726	170600
0.047uF	C501·508	24015
Electrolytic Capacitors		
1uF/160V	C730	1422151
2.2uF/50V	C717	809246
4.7uF/50V	C703, 719	1400240
10uF/16V	C511-513, 516, 705, 707, 713	20024
10uF/25V	C712	20037
10uF/160V	C731	170608
22uF/16V	C706	20025
22uF/63V	C602	170609
33uF/10V	C710	170610
47uF/16V	C720	1400244
100uF/25V	C517	800370
220uF/10V	C709	170611
220uF/16V	C727, 728, 732	20029
330uF/25V	C515	170836
1000uF/10V	C711	800372
3300uF/25V	C510	170612
4700uF/16V	C509, 514	170613
Polystyrene Capacitors (All 50V. D.C. W.)		
0.0047uF	C715	170437
0.0068uF	C714	170614
0.0082uF	C723	170615
0.01uF	C718	170439
0.022uF	C721	170616
0.033uF	C725	170617
0.047uF	C701, 702, 708, 716	170422
0.082uF	C722	170618

Value	Circuit Reference	Part No.
Polypropylene Capacitors		
0.0033uF/630V	C733	170619
0.068uF/400V	C729	170620
Tantalum Capacitors		
1uF/25V	C704	170621
Circuit Ref.	**Description**	**Part No.**
I.C.s		
IC501	L78MG · OEC	170445
IC502	L78MG	170446
IC701	UPC1031H2	170622
IC503	UPC78M12	1422278
Transistors		
Q501, 502	2SD313	50005
Q503, 505, 603, 604	KTA1015Y	170453
Q504, 506, 601, 602, 701	KTC1815	170447
Q605	KTC2229Y	170624
Q702	KTA950Y	170448
Q703	2SD1159	170623
Diodes		
D501-508	Rect. 30D · IFC	170625
D509	Rect. 10D · 1	1400125
D601	Zen. RD47FB	170626
D602, 701	Sili. DS442X · BT	1422117
D603	Zen. RD56FB	170627
D702, 703	Ger. IN34A	170628
D704	Rect. V09C	170629
D705	Rect. V06C	170630
D706	Rect. B 8-4	1422116
D707	Rect. 10D-2	1400123
Coils & Transformers		
L701	D.Y. 71011202	170510
L702	Linearity CL 21000006	170631
L703	Horizontal C.L. 305Y001	170632
L704	C.L. 100uH	1400148
T501	Power Tx. 0766001E	S/170832
T701	H.Drive Tx. RB20852	170633
T704	F.B./Lopt 2012003	170635
Variable Resistors		
VR501	S.F. 500ohm	1422189
VR502, 703	S.F. 2k	1400230
VR601	ROT. 1k	170518
VR602	ROT 10k	170519
VR604, 605	S.F. 50k	920142
VR701	ROT 30k	170833
VR702	S.F. 10k	1422191
Miscellaneous		
CD501	D.C. Cord IG060401	170316
CD601	D.I.N. Cord 8GE 70001	170317
F502	4A (T) Fuse	1400254
F503	2A (T) Fuse	1400253
TH701	Thermistor SDT-250S	170635
V701	C.R.T. 310GNB31	170507

CTM644 CABINET DRAWING

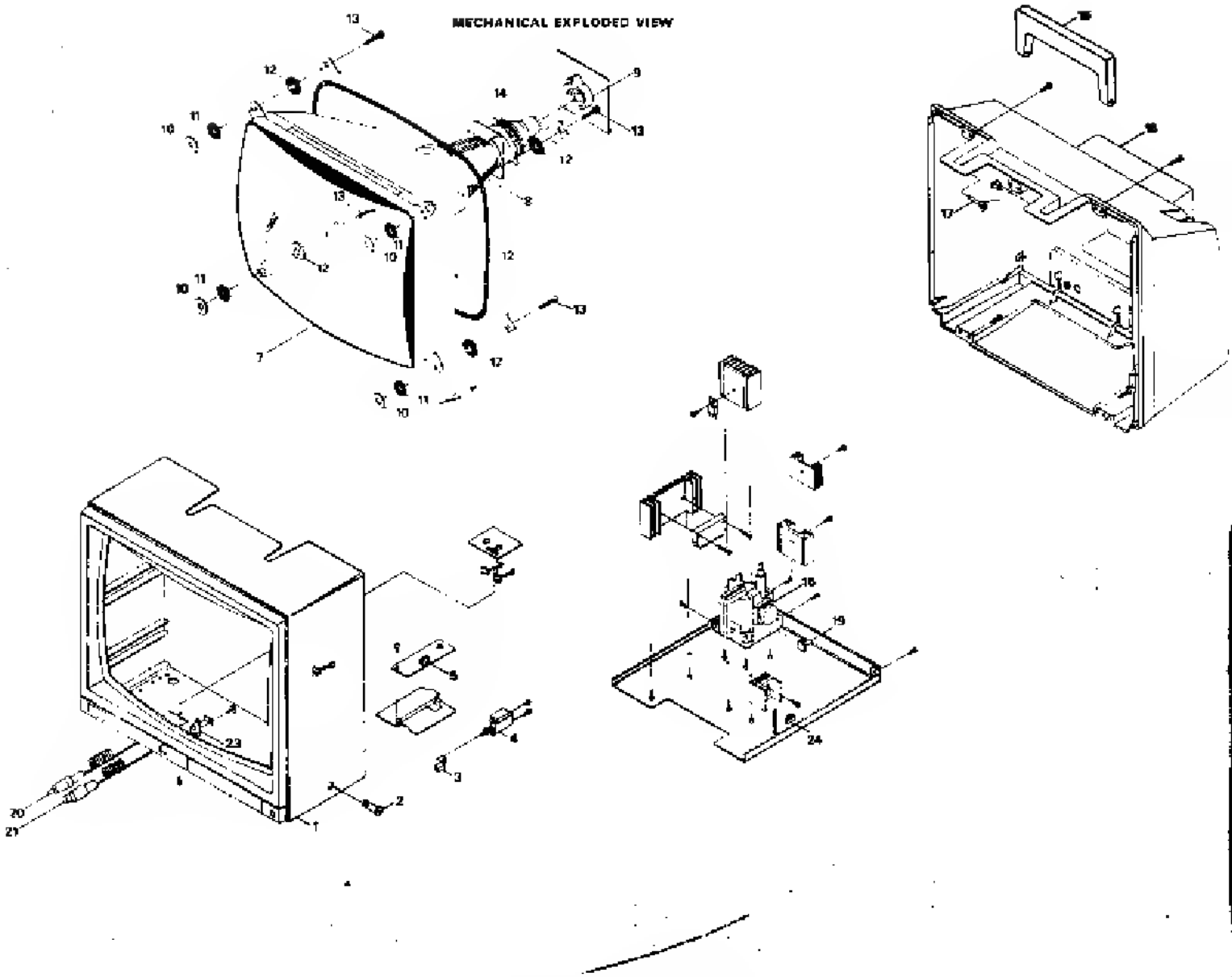

CTM644 CABINET PARTS LIST

Sym	Description	Part No.
1	Front Cabinet	170841
2	Control Knob Brightness	170304
4	Button On/Off	170305
4	Power On/Off Switch	170306
5	Brightness Control	170315
6	Degauss Coil	170842
7	C.R.T.	170307
8	Deflection Yoke	170308
9	C.R.T. Socket	170843
10	Metal Washer Bottom	1400011
11	Rubber Washer	1400012
12	Metal Washer Top	1400011
13	Fixing Screw	1400013
14	Static Rings	170311
15	Handle	170312
16	Rear Cabinet	170313
17	Handle Retainer	170314
18	F.B.T.x.	170467
19	V. Hold Control	1400035
20	D.C. Cord	170316/A
21	DIN Cord	170317/A
23	D.C. Jack	170844
24	Service Normal Switch	900101

CTM644 ELECTRICAL PARTS LIST

Value	Circuit Reference	Part No.
Carbon Film Resistors (all ¼W unless otherwise shown)		
100ohm	R810, 901-903	10032
220ohm	R407, 416	10040
270ohm	R807, 811, 814	10042
330ohm	R401, 404, 422	10044
390ohm	R414	10046
470ohm	R505, 510	10048
1kohm	R411, 423, 432, 519, 815, 816	10061
1k5ohm	R420, 421, 441	10065
1k8ohm	R402, 403, 442	10067
2k2ohm	R410	10069
2k7ohm	R804-806	10068
4k7ohm	R426, 518	10077
6k8ohm	R415	10081
8k2ohm	R406, 418, 419	10083
10kohm	R424, 428, 429	10085
12kohm	R409	10087
15kohm	R431, 450	10089
27kohm	R425	10095
47kohm	R412, 440	10101
56kohm	R417	10103
82kohm	R430 439	10107
180kohm	R408	10115
220kohm	R413	10117
270kohm	R504	10119
680kohm	R451	10129
1ohm2/½W	R443	170401
470ohm/½W	R445	1422125
680ohm/½W	R447	809223
1kohm/½W	R514-517	1400165
1k5ohm/½W	R448	1422126
2k2ohm/½W	R446	170402
2k7ohm/½W	R802-804	1400166
180kohm/½W	R506 507	170403
1Mohm	R801	1400171
Fuse Type Resistors		
1ohm/¼W	R521	809252
8.2ohm/¼W	R444	170404
10ohm/¼W	R511	809256
0.82ohm/1W	R438 437,	1422141
2.2ohm/1W	R435,	1400184
Cement Resistors		
5.6ohm/5W	R501	1422136
15ohm/7W	R436	170417

Value	Circuit Reference	Part No.
Metal Oxide Resistors		
120ohm/1W	R449	170405
1kohm/1W	R503	170406
3k9ohm/1W	R505	170407
15kohm/1W	R805, 812	170408
0.22ohm/2W	R513	170409
15ohm/2W	R512	170410
33ohm/2W	R509	170411
82ohm/2W	R520	170412
100ohm/2W	R433	170413
3k3ohm/2W	R427	170414
6k8ohm/2W	R405	170415
1ohm/3W	R502	170416
Electrolytic Capacitors		
1uF/50V	C414	20062
1uF/160V	C419	1422151
1uF/250V	C506	1422152
4.7uF/50V	C407 420	1400240
10uF/16V	C520	20024
22uF/10V	C437	170418
22uF/250V	C430	170419
47uF/10V	C436	170420
47uF/16V	C405, 418	1400244
47uF/50V	C512	170421
47uF/160V	C401	170422
100uF/16V	C412, 443, 523	20028
100uF/35V	C425	1422157
100uF/160V	C515	1400246
100uF/400V	C505	170423
220uF/35V	C507	20055
220uF/160V	C515	170851
470uF/10V	C518	170424
470uF/25V	C435, 519	20044
470uF/35V	C402, 522	1422262
2200uF/25V	C424	170425
Ceramic Capacitors		
22pF/500V	C416	1400217
100pF/500V	C423, 441	1400218
130pF	C806	170426
180pF/500V	C403	170427
240pF	C804	170428
270pF/2kV	C432	170429
330pF	C803, 807	1422255
560pF/500V	C417	1400220
680pF	C802	1400213
2200pF/4kV	C513	170430
0.001uF/500V	C516, 521	170431
0.001uF/2kV	C511, 801	1422147
0.0015uF/2kV	C510, 514	170432
0.0022uF/2kV	C502-504	1400223
0.0047uF	C508, 509	170433

CTM644 ALIGNMENT INSTRUCTIONS

STEP	FUNCTION	SIGNAL IN	SIGNAL OUT	METHOD	REMARKS
1	Black and White Tracking		Monitor Screen.	1. Turn R & B Drive Controls VR804 & VR805 fully counterclockwise 2. Turn R, G & B Bias Controls VR801, 802, 803 fully counterclockwise 3. Set Ser. Nor. Switch to Ser. position.	Monitor connected to CPC664.
2.	Black & White Tracking		Monitor Screen Monitor Oscilloscope.	1. Adjust 120V at the collector of Q802 with Brightness Control on the Oscilloscope. 2. Rotate the screen control to fully counterclockwise & bring it back to obtain a dim line of one prominent colour 3. Rotate the other two colours till a dim white line is obtained 4. Bring Ser. Nor. Switch to Nor. position	Monitor connected to CPC664 If required adjust the colour control
3	If no satisfactory results repeat step 2				
4	Vertical Size	Program the paper edge	Monitor Screen	Adjust VR406 to obtain paper edge to be 145mm.	Use non magnetic ruler
5.	Focus Adjustment.	Program the paper edge	Monitor Screen	Adjust Focus Control on the Flyback Tx for maximum definition & details	Brightness & Contrast control set to normal viewing
6	5V Adjustment	Switch on the Monitor	AVO Meter	Connect A.V.O. across C518 & adjust VR501 to obtain 5V exactly	
This adjustment (6) should not be disturbed under normal conditions.					
7	Sub Brightness Control.	Switch on the Monitor	A.V.O. Meter.	Connect A.V.O. to collector of Q802. Adjust VR402 to read 120V	Keep Brightness Control to maximum position
8	Sub H. Hold & H. Hold Adjustment.	Switch on the Monitor.	Frequency Counter.	Rotate H. Hold fully counterclockwise. 1. Adjust VR404 to read 14500Hz 2. Adjust VR403 to read 15625Hz	Read the Meter across CRT Heater & Earth

CTM644 ELECTRICAL PARTS LIST

Value	Circuit Reference	Part No
Polypropylene Capacitors		
0.012uF/1600V	C431	170434
0.1uF/250V	C501	1400202
0.82uF/200V	C429	170435
Polystyrene Capacitors		
0.001uF	C442	170850
0.0015uF	C408	170436
0.0047uF	C421	170437
0.0056uF	C415	170438
0.01uF	C413, 427	170439
0.015uF	C409	170441
0.039uF	C404	170440
0.047uF	C406	170442
0.068uF	C410, 422, 428	170443
Tantalum Capacitors		
1uF/16V	C411	1400225
2.2uF/16V	C426	1400226
I.C.s		
IC401	LA7800	1400106
IC402	LA7830/UPC1378	170444
IC501	STK7308	170445
IC502	L78MG	170446
IC503	UPC78M12	1422278

Circuit Ref.	Description	Part No
Transistors		
Q401, 402, 504, 506	KTC1815Y	170447
Q403	KTA950Y	170448
Q404	2SC2271	170449
Q405	2SD1397	170450
Q501	2SD1207	170451
Q502	2SD880Y	170452
Q503, 505	KTA1015Y	170453
Q801-803	2SC3417	170454

Circuit Ref.	Description	Part No.
Diodes		
D401	Sil. IS2472T	170455
D402, 403	Zen. RB11EB	1400124
D404, 506, 508	Rect. DFC10E	1422115
D405, 407, 408	Sil. TVR 06K	170456
D406	Rect. BB-4	1422116
D501-504	Rect. 20E10	170848
D505, 507	Zen. RD 3.6FB	170458
D509	Rect. RGP 30J	170459
D510	Zen. SR2M	1400122
D511, 512	Rect. RU4A	170460
D901-903	Zen. GZA5.2Y	1422114
Coils & Transformers		
L401	Linearity Coil **1431MS**	1400145
L501	Line Filter FKOB **160MH14**	1400130
L502	Degauss Coil	170842
L801	Coil 100uH	1400148
T401	H. Drive 305Y001	170463
T402	Pin Cushion 1432MS	170464
T501	Switching Tx 8142006	170845
Switches		
SW401	Slide Switch	900101
SW501	Power On/Off Switch	170306
Variable Resistors		
VR401	Rot. 500ohm	170315
VR402	S.F. 5k	1400227
VR403	S.F. 5k	1400227
VR404	S.F. 2k	1400230
VR405	Rot. 20k	1400035
VR406, 407	S.F. 1k	170466
VR801	S.F. 5k (R)	1400197
VR802	S.F. 5k (G)	1400198
VR803	S.F. 5k (B)	1400199
VR804	S.F. 500ohm (R)	1400200
VR806	S.F. 500ohm (B)	1400201
Miscellaneous		
FB401	FB/LOPT 3714004	170467
F501	Fuse 2A (T)	1400253
TH501	Degauss Element ERP F5BOM180H	1400195
V001	C.R.T. 3701B22-TC20	170307
J501	D.C. Jack	170844
J801	C.R.T. Socket HPS0092-01-030	170843

CTM644 VOLTAGES

IC401 - LA7800
1 - 6.35V DC
2 - 6.48V DC
3 - 0.32V DC
4 - 0V DC
5 - 0V DC
6 - 0.85V DC
7 - 3.21V DC
8 - 0.33V DC
9 - 0.93V DC
10 - 5.55V DC
11 - 0.96V DC
12 - 11.04V DC
13 - 0.89V DC
14 - 11.18V DC
15 - 12.43V DC
16 - 4.11V DC

IC402 - LA7830/ UPC1378
1 - 0V DC
2 - 12.74V DC
3 - 24.4V DC
4 - 0.84V DC
5 - 0V DC
6 - 24.2V DC
7 - 2.5V DC

IC502 - LM78M6
1 - 18V DC
2 - 0V DC
3 - 6.4V DC
4 - 5.0V DC

Q405 - 2SD1397
E - 0V DC
B - 0.1V DC
C - 98.8V DC

Q404 - 2SC2271
E - 0V DC
B - 0.3V DC
C - 34.1V DC

CTM644 CIRCUIT DIAGRAM

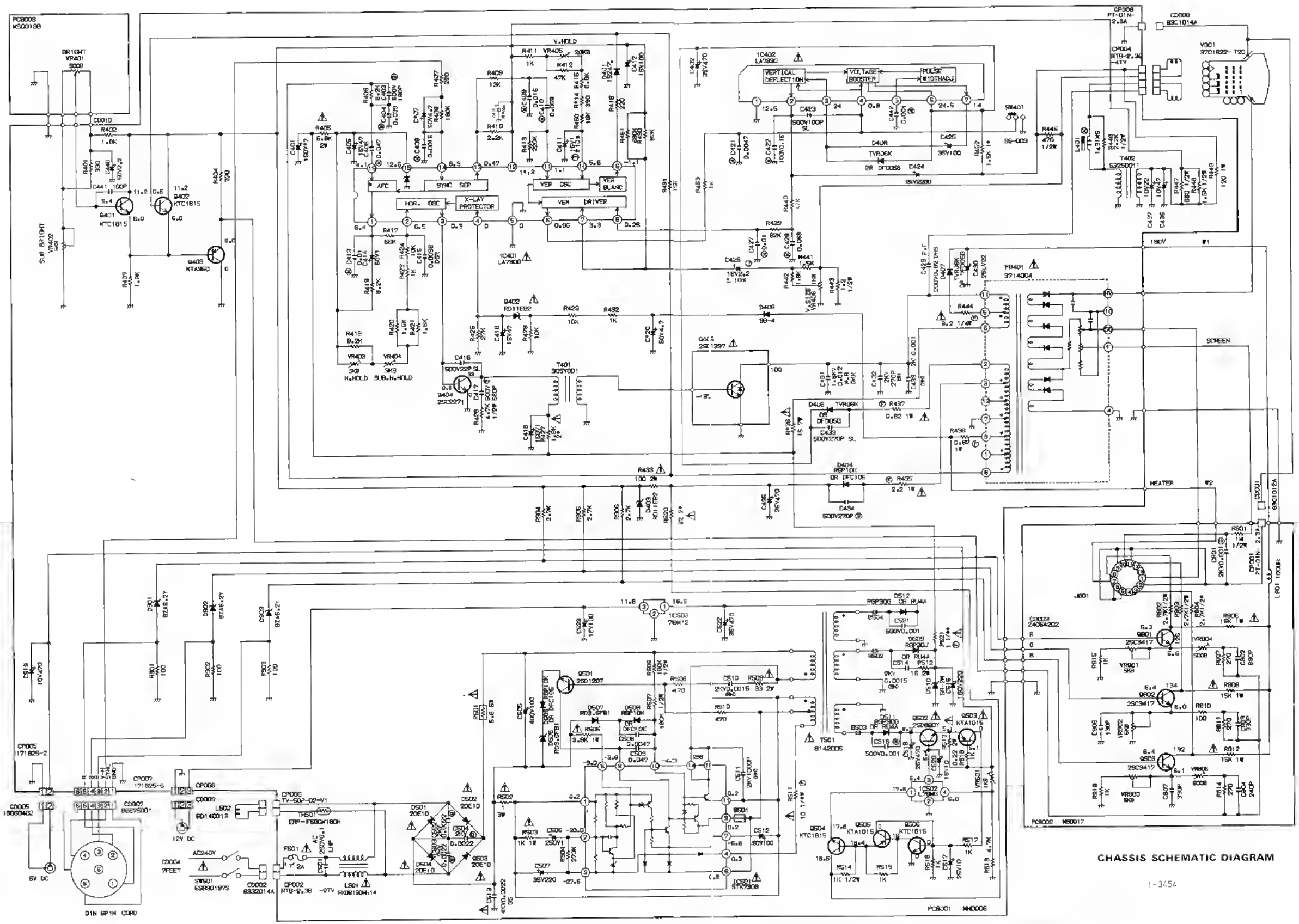

CHASSIS SCHEMATIC DIAGRAM

1-3454

CAUTION: SINCE THESE PARTS MARKED BY ⚠ ARE CRITICAL FOR SAFETY , USE ONES DESCRIBED ON PARTS LIST ONLY.

ATTENTION : LES PIECES REPAREES PAR UN ⚠ ETANT DANGEREUSES AU POINT DE VUE SECURITE N'UTILISER QUE CELLES DECRITES DANS LA NOMENCLATURE DES PIECES.

NOTE: THIS SCHEMATIC DIAGRAM IS THE LATEST AT THE TIME OF PRINTING AND SUBJECT TO CHANGE WITHOUT NOTICE.

M203-09

MAIN P.C. BOARD

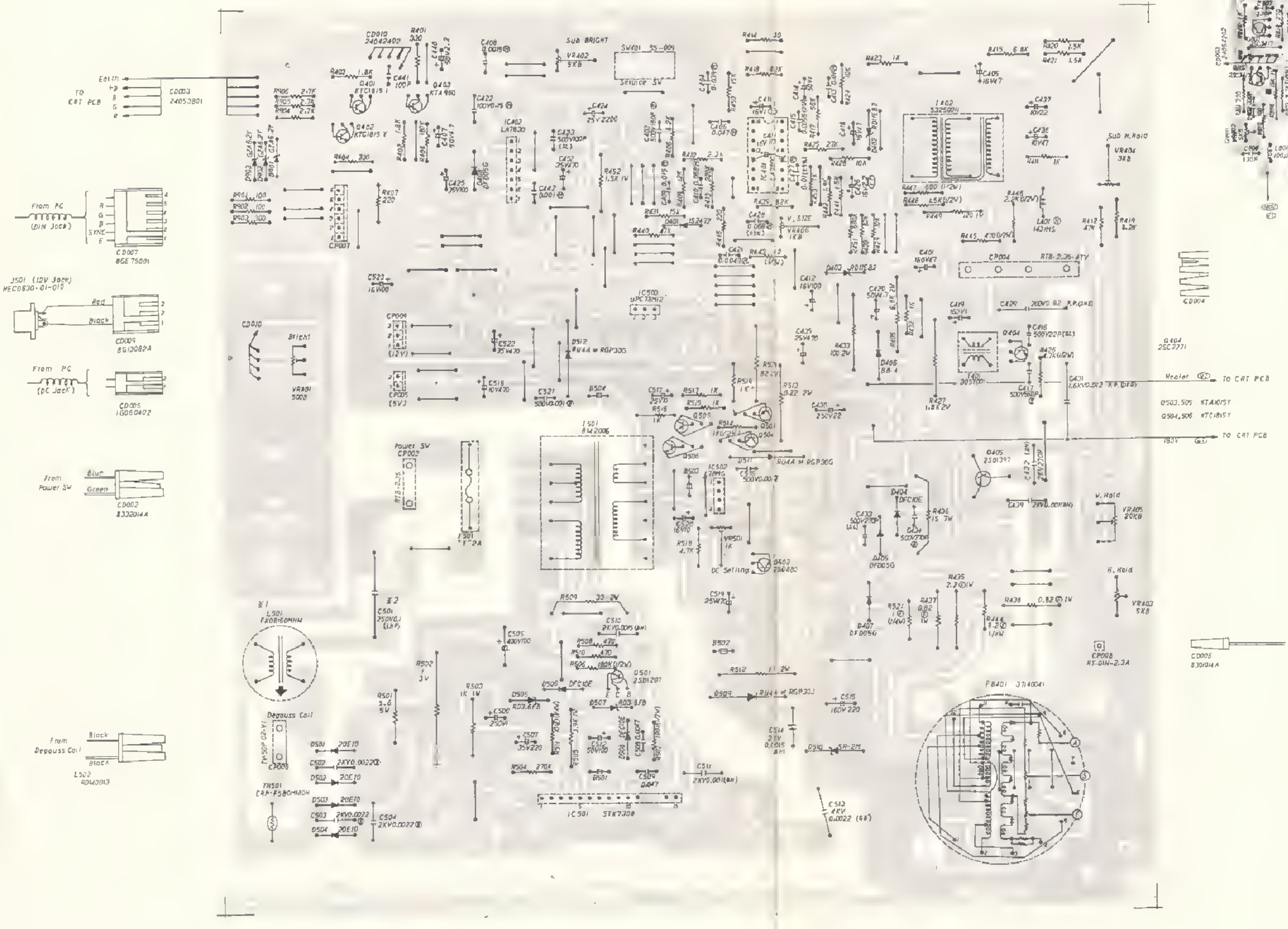
CD010 24042402
R401 330
C446 50V2.2
R400 1.8K
Q401 KTC1815 Y
C441 100P
Q403 KTA 950
C408 0.0015
SUB BRIGHT
VR402 5KB
SW401 SS-005
SERVICE 5V
C422 100V0.45
C424 25V2200
IC402 LA7830
C423 500V0.01
C402 35V470
C425 35V100
D402 DF005G
C407 50V4.7
R403 1.8K
R404 180
R464 330
R452 1.5K 1W
R407 220
C442 0.001
R431 15K
C427 0.015
R440 47K
C421 0.0047
R442 1.2 (1/2W)
C523 16V100
IC503 UPC78M12
CP009 (12V)
CP005 (5V)
C522 35V470
C518 10V470
C321 50V0.01
B504
D512 RU4A or RGP30G
R509 92 2W
R514 1K
R513 0.22 2W
C517 25V10
R517 1K
R515 1K
R516 1K
Q505
Q501
Q504
R514 1K (2W)
D511 RU4A or RGP30G
IC502 78M6
C516 50V0.01
B503
C520 16V10
VR501 1K
DC Setting
Q502 2SD480
I 501 BW2006
Power SW CP002
F501 T 2A
R518 4.7K
C519 25V470
R504 33 2W
C510 2KV0.005 (BK)
C505 400V100
R508 470
R510 470
R506 180K (1/2W)
Q501 2SD1207
B502
R512 1 2W
Q509 RU4A or RGP30J
C515 160V220
C514 2KV 0.0015 BH
D510 SR-2M
C513 4KV 0.0022 (BK)
D505 DF10E
D507 RD3.6FB
R503 1K 1W
C506 250V
C507 35V220
R505 3.3K (2W)
C509 50V100
C508 0.047
B501
C511 2KV0.001 (BK)
R502 3V
R501 3.6 5W
C501 250V0.1 (LNF)
※2
※1
L501 FK08K60MHM
Degauss Coil
TH-SCP 02-V1
CP008
YR501 ERA-F58CM180H
D508 20E10
C502 2KV0.0022
D502 20E10
D503 20E10
C503 2KV0.0022
C504 2KV0.0022
D504 20E10
IC501 STK7308
R444
R445 470 (1/2W)
R446 2.2K (1/2W)
R447 680 (1/2W)
R448 6.5K (1/2W)
R449 220 1W
L401 143HS
C401 160V47
CP004 RT8-2.35-4TY
C412 16V100
C420 50V4.7
C429 200V0.82 P.P.(J+K)
C435 25V470
R433 100 2W
R408 6.8K 2W
R405 1K
D408 BB-4
C416 500V220P(5%)
D404
R425 2.2K(1/2W)
C417 500V560P
C431 1.6KV0.012 P.P.(J+K)
R427 1.8K 2W
C430 25V22
D406 DF10E
C433 500V270P (5%)
R436 15 7W
C434 500V330P
D405 DF005G
D407 DF005G
R521 1 (1/4W)
R437 0.82 (1/4W)
R438 0.82 Ω 1W
R439 2.2Ω 1W
R441 0.2Ω 1/4W
C439 2KV0.001(BK)
Q405 2SD1397
C432 2KV270P
VR405 20KB
H. Hold
VR403 5KB
CP008 RT-01N-2.3A
FB401 3714004
R422 1K
C405 16V47
R415 6.8K
R420 1.5K
R421 1.5K
C437 10V22
C436 10V47
R411 8K
Sub H.Hold
VR404 3KB
C403 25V10
C404 2KV 0.001
R419 3.2K
R412 47K
C401 25V0.001
R402 2.7K (1/3W)
R401 1.5K 1W
L401 100μ
C406 1.0M
R405 15K 1W
B501 1M (1/3W)
CP001 m5-01N-2.3A
CD001
From CRT Earth
CD004
Q404 2SC2271
Heater
TO CRT PCB
180V
Q503.505 KTA1015Y
Q504.506 KTC1815Y
TO CRT PCB
C.R.T. P.C. BOARD
CRT SOCKET
Blue
Blue
Red
Red
Green
VR801 5KB
VR802 5KB
VR803 5KB
VR804 5KB
C804 2KV
R807 270
Q801 2SC3417
R804 2.7K (1/3W)
R803 15K 1W
R806 2.7K (1/3W)
C805 2KV
C806 1.0M
C807 2KV
R808 1.2K
C808 2KV
R809 1.2K
C809 2KV
R810 1.2K
C810 2KV
R811 1.2K
C811 2KV
R812 1.2K
C812 2KV
R813 1.2K
C813 2KV
R814 1.2K
C814 2KV
R815 1.2K
C815 2KV
R816 1.2K
C816 2KV
R817 1.2K

INTERFACE CIRCUIT DIAGRAM

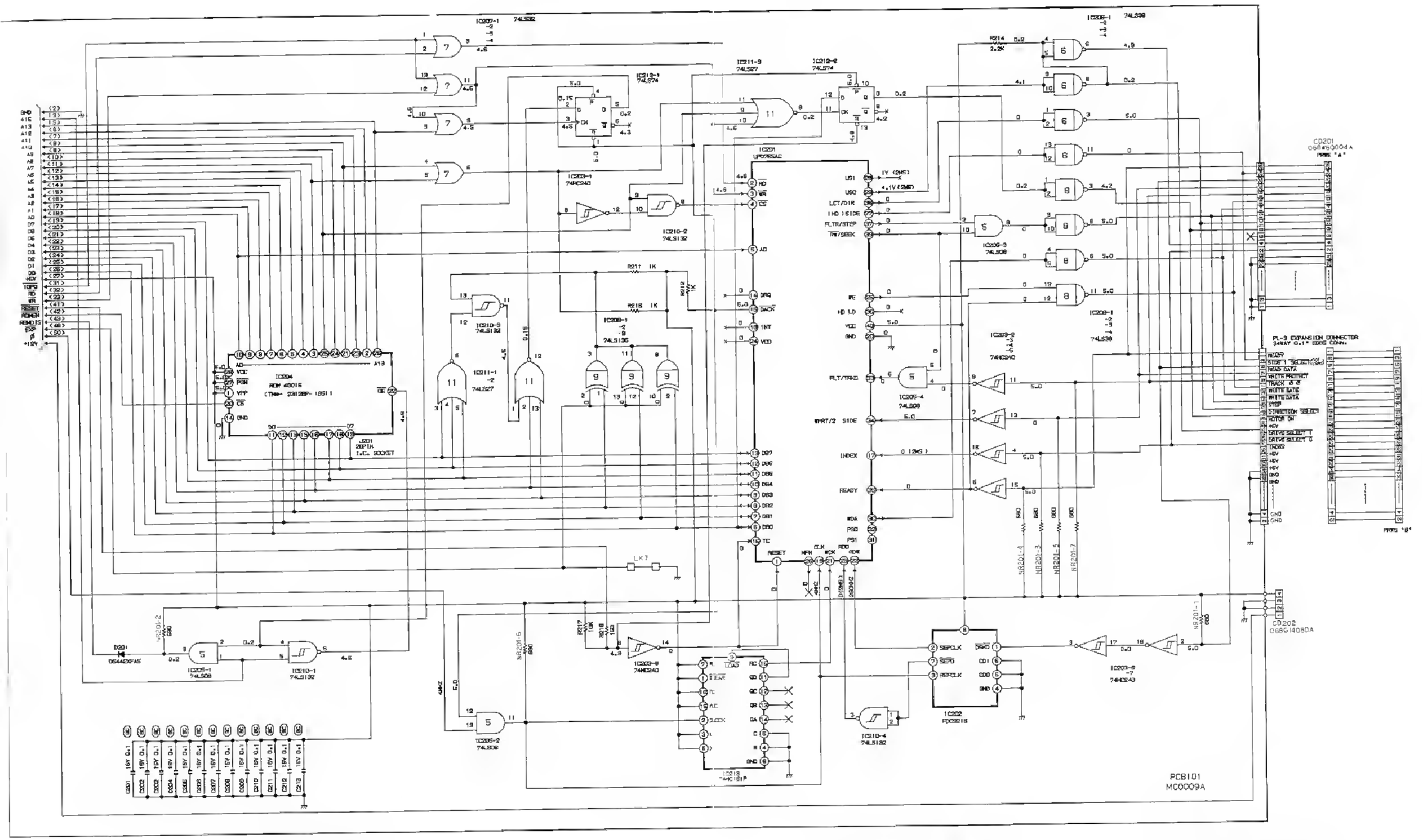

CONDITION: MAIN SWITCH IS SWITCHED ON & BE READY TO WORK. AND THE DISKET IS NOT IN DRIVE.

NOTE: THIS SCHEMATIC DIAGRAM IS THE LATEST AT THE TIME OF PRINTING AND SUBJECT TO CHANGE WITHOUT NOTICE.

CHASSIS SCHEMATIC DIAGRAM

M208-01 1-3581

Note: See Page 21 for Electrical Parts List

DISC CONTROL CIRCUIT DIAGRAM

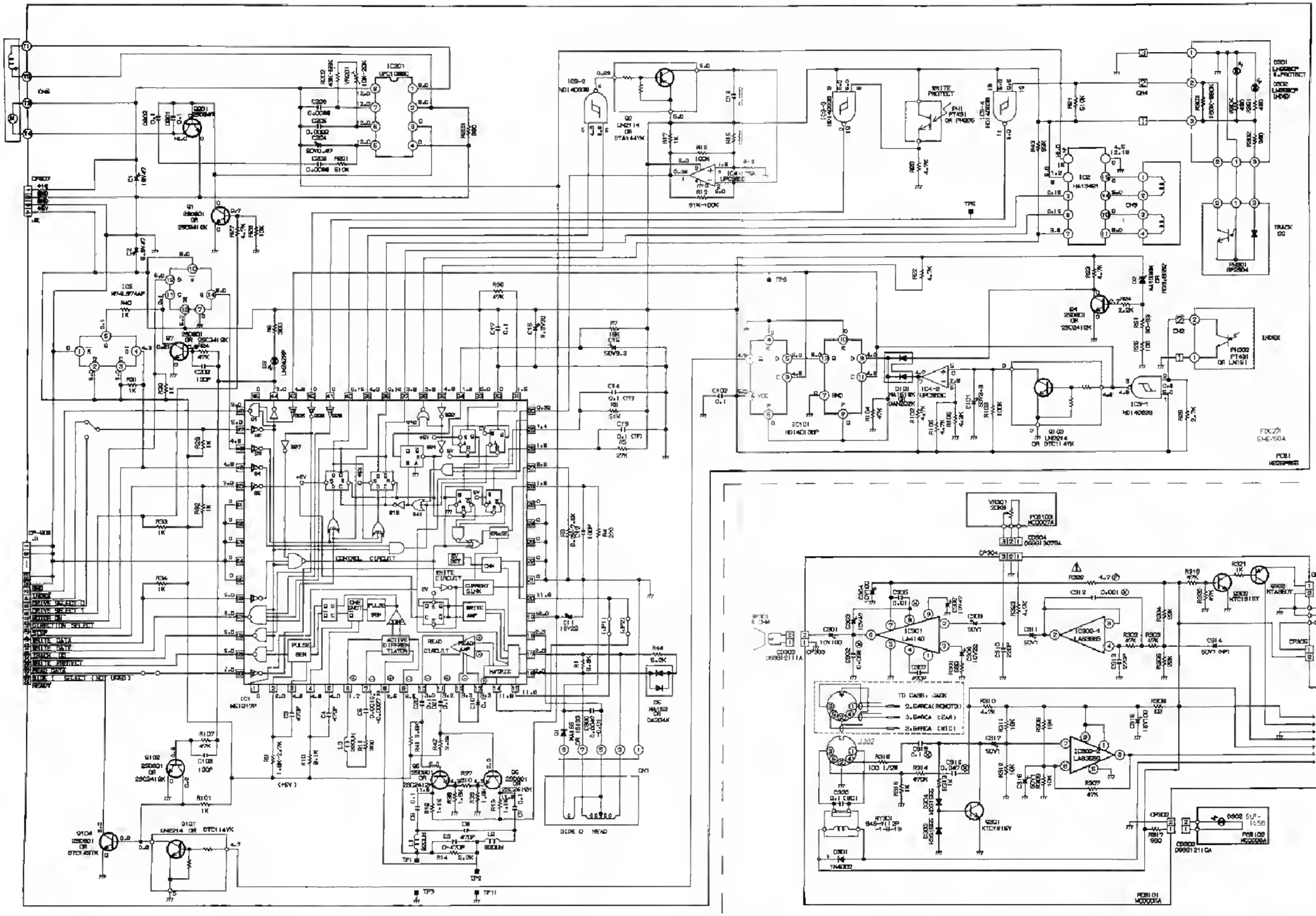

WARNING: This Circuit Diagram is for information only. During the warranty period Service Agents must return the Disc Drive Mechanism complete with PCB30001 for replacement

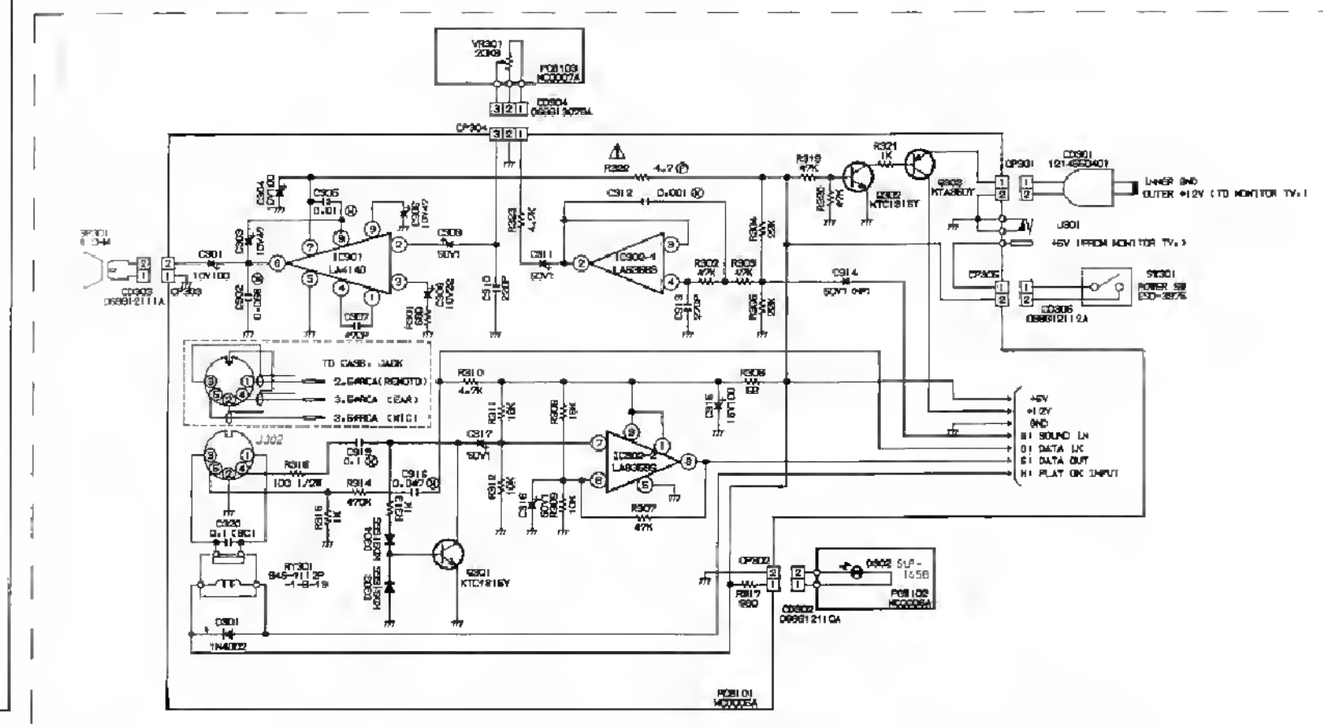

CONDITION : MAIN SWITCH IS SWITCHED ON ,
BS READY TO WORK.
AND THE DISKETTE IS NOT IN DRIVE
J1 PIN NO 2.4***28 IS LOW ACTIVE.

NOTE: THIS SCHEMATIC DIAGRAM IS THE LATEST AT THE TIME OF PRINTING AND SUBJECT TO CHANGE WITHOUT NOTICE.

ATTENTION: LES PIECES REPAREES PAR UN ⚠ ETANT DANGEREUSES AN POINT DE VU SECURITE N'UTILISER QUE CELLES DECRITES DANS LA NOMENCLATURE DES PIECES.

CAUTION: SINCE THESE PARTS MARKED BY ⚠ ARE CRITICAL FOR SAFETY, USE ONES DESCRIBED ON PARTS LIST ONLY.

CASSETTE CONTROL CIRCUIT DIAGRAM

1-3453 M206-01

Sym	Description
1	Head Assembly
2	Stepper Motor
3	Stepper Motor Rotation Bolt
4	Spindle Motor
5	Flywheel
6	Pulley
7	Read/Write Protect/Index/LED P.C.B.
8	Track 00 Sensor Assembly
9	Spring
10	Loading Unit

MECHANISM

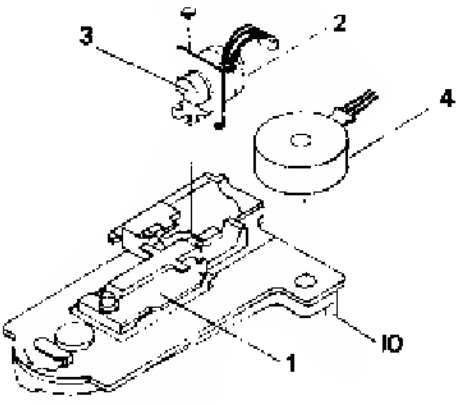

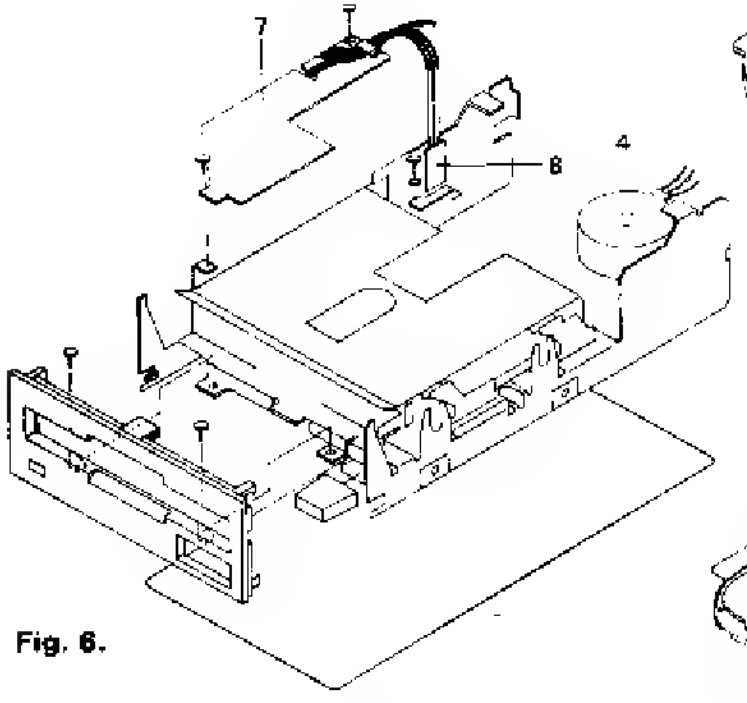

Fig. 6.

This drawing is for information only. During the warranty period Service Agents must return the Disc Drive Mechanism complete with PCB30001 for replacement.

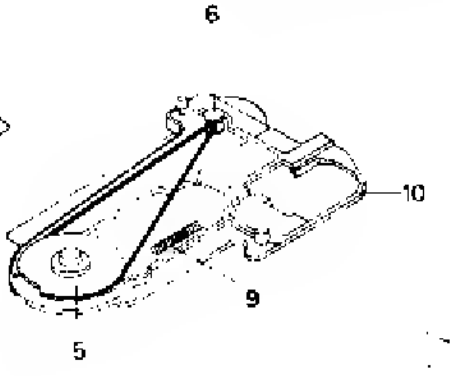

MECHANICAL REPLACEMENTS

Head Assembly

i) Remove 2 screws from F. panel and remove F. panel.

ii) Remove 4 screws from the control PCB

iii) Disconnect plug from Stepper Motor.

iv) Disconnect plug from LED P.C.B.

v) Disconnect transistor from Spindle Motor.

vi) Disconnect Index Sensor from front of P.C.B.

vii) Raise P.C.B. from side opposite LED and remove plug from head.

viii) Control P.C.B. will now be free – remove.

ix) Remove 4 screws securing the Loading Unit to the chassis from the Flywheel side and remove Loading Unit.

x) Remove spring and rod support screws.

xi) Gently slide the head off the rod.

xii) Replacement is reverse process
After reassembly check alignment of Azimuth Burst/Track 00 Positioning.

Spindle Motor

i) Remove transistor fitted to Motor.

ii) Unplug CN5 from Control P.C.B.

iii) Remove Drive Belt.

iv) Undo 2 screws securing motor.

v) Replacement is reversal of removal.

vi) Adjust VR201 so Index frequency is 200 ± 2ms (See Fig. 5-1).

Stepper Motor

i) Remove Control P.C.B. as (1).

ii) Remove 2 securing screws for Stepper Motor Bracket.

iii) Stepper Motor can now be removed.

iv) After replacement index and positioning must be checked and amended as necessary.

TECHNICAL SPECIFICATION

LSI CHIPS:

Z80A	processor running at 4MHz
128K	bytes of RAM arranged in two 64K banks (over 41K available to user in BASIC, 61K available TPA to CP/M Plus)
48K	bytes of ROM containing BASIC, the operating system and disc extensions
6845	CRT controller device
AY-3-8912	sound generator chip 3 voice, 8 octaves
8255	parallel I/O device
7653	floppy disc controller

DISPLAY SPECIFICATION:

Display Mode	Mode 1	Mode 2	Mode 3
No. of colours	4 from 27	2 from 27	16 from 27
Vertical dots	200	200	200
Horizontal dots	320	640	160
Horizontal characters	40	80	20

KEYBOARD:
74 Keys — qwerty style, numeric cluster, cursor and copy cursor, return, enter, shift, caps. lock, tab, delete, clear, control.

CASSETTE HANDLING:
Write speed software selectable — 1K baud or 2K baud, read speed automatically established by software. Motor on/off controlled by software

ADD-ON ABILITY:
Additional compact floppy disc drive system, type FD-1.
Centronics compatible printer.
Joystick(s).
Various peripherals including up to 252 additional 16K ROMs.

EXTERNAL SOCKETS:
PCB edge connectors for general purpose expansion and Centronics parallel printer.
Disc drive 2 socket (Use DI-2 connecting lead).
9 Pin D-type socket for joystick (Amsoft type JY2).
6 Pin DIN Socket for
— RGB and sync
— Luminence + sync
5 Pin DIN socket for external cassette recorder. (Use CL1 lead).
3.5mm stereo socket for stereo sound output.
5mm plug and lead to connect 12V (disc) power socket on the monitor.
5mm socket for CPC6128 5v power supply (supplied exclusively from monitor).

DIMENSIONS (mm):

	w	h	d
Keyboard	510	48	170
CTM644	375	340	365
GT65	305	315	335
Joystick	90	170	100
Modulator	120	70	170

WEIGHTS (Kg):

Keyboard	2.0
CTM644	10.6
GT65	6.3
Joystick	0.3
Modulator	1.4

POWER SUPPLY:
Screen System: 240V AC 50Hz (keyboard and disc drive power supplied by screen system)
CP/M usually assumes an 80 column screen is availeble. The CPC6128's ability to present text in 80 column format is a prerequisite for the majority of CP/M applications.

Disc System Specification:
The disc drive is a 3 inch system, conforming to the Hitachi/ Panasonic standard. The software is configured for a 12mS step rate, and 30mS settling time.
The system is designed to control a maximum of 2 drives. A ROM contains the extensions for AMSDOS and the machine dependent elements of CP/M and Dr LOGO.
The ruggedly constructed 3 inch discs are usable on both sides, each side is provided with a reusable write protect clip which is slid into position as required

AMSDOS & CP/M Plus
AMSDOS is a disc operating system which expands Locomotive BASIC, adding additional commands to make full use of the disc files. AMSDOS enables BASIC programs to access disc files in the same manner as cassette files, in fact the same commands are used with file names conforming to CP/M and CP/M Plus conventions. AMSDOS and CP/M both share the same file structure and can read and write each other's files. The Digital Research CP/M Plus operating system is supplied with the CPC6128, permitting the user to access the wealth of applications software written to run under CP/M. In addition to the usual CP/M Plus utilities additional features have been included for the CPC6128.

Disc Organisation:
Both AMSDOS and CP/M Plus support two different disc formats: System format, and DATA only format
Format selection is automatic on disc access. Both formats use the same framework, but have different sector configurations.
Common to all
Single-sided, double density.
512 byte sector size.
40 tracks.
Sectors interleaved 2:1.

SYSTEM format:
The most frequently used format, since CP/M 2.2 and CP/M Plus may only be loaded from a system format disc. 2K is used for the directory, and 9K reserved for the system.
9 sectors per track.
2 reserved tracks for CP/M.
169K byte file capacity.

DATA only format:
All the tracks are used to store data.
2K bytes reserved for the directory.
9 sectors per track
No reserved tracks.
178K byte file capacity.
The CPC6128 is compatible with programs developed for Amstrad CP/M 2.2 and will run Amstrad CP/M 2.2 discs. Programs developed specifically for CP/M Plus with GSX will not run on Amstrad CP/M 2.2. The term CP/M Plus is synonymous with CP/M 3.0.
Either side of an AMSTRAD CP/M Plus or AMSDOS disc may be accessed by the disc controller, depending on which way round the disc is inserted.
Please note that while every care has been taken to ensure compatibility with existing CP/M software, some packages available make use of undocumented features of the CP/M operating system, and these may not be supported by the CPC6128 implementation. Protected cassette files may not be occupied on disc, and care should be taken to observe the copyright conditions of any software when transfering programmes between cassette and disc
In keeping with our policy of continually improving our service, and the technical quality of our products, we reserve the right to change component types, manufacturers, sources of supply or technical specification at any time.

Keyboard/computer unit Colour Monitor, Monochrome Monitor — Designed in U.K., Made in Korea.
Joystick — Designed in U.K., Made in Taiwan
Power Supply/Modulator — Designed in U.K., Made in U.K.
Software — Written in U.K. and U.S.A., Made in Korea and the U.K.
CP/M Plus, CP/M and Dr Logo are trade marks of Digital Research Inc. AMSTRAD, AMSOFT, AMSDOS, CPC464, and CPC6128 are trademarks of AMSTRAD Consumer Electronics PLC

AMSTRAD CONSUMER ELECTRONICS plc.,
Brentwood House, 169 Kings Road,
Brentwood, Essex CM14 4EF.
Telephone: (0277) 228888